# DRAINAGE STUDY

## COSTCO ESONDIDO

210 EAST VIA RANCHO PARKWAY
ESCONDIDO, CA 92025

APN# 271-030-14-00

Prepared Under the Responsible Charge of:

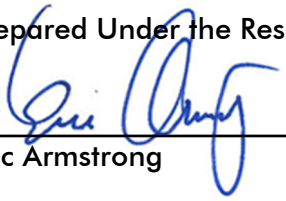

Eric Armstrong RCE 36083

Fuscoe Engineering, Inc.
6390 Greenwich Dr., Ste 170
San Diego, CA 92122
858-554-1500
earmstrong@fuscoe.com

For
Costco Wholesale
999 Lake Drive
Issaquah, WA 98027

SEPTEMBER 2022

# TABLE OF CONTENTS

1. INTRODUCTION ..... 1
1.1 Project Location ..... 1
1.2 Existing Conditions ..... 2
1.3 Proposed Conditions ..... 2
2. METHODOLOGY ..... 3
2.1 Rational Method ..... 3
2.2 Runoff Coefficient ..... 5
2.3 Rainfall Intensity ..... 5
3. CALCULATIONS/RESULTS ..... 5
3.1 Peak Flow Comparison ..... 5
3.2 Hydraulic Analysis ..... Error! Bookmark not defined.
4. CONCLUSION ..... 5

**Appendix 1**.....Existing Hydrology Map
**Appendix 2**.....Proposed Hydrology Map
**Appendix 3**.....Basin Summary Table & Runoff Coefficient Calculations
**Appendix 4**.....Existing Hydrology Calculations
**Appendix 5**.....Proposed Hydrology Calculations
**Appendix 6**.....As-Built References

# 1. INTRODUCTION

The purpose of this drainage study is to compare the 100-year storm event pre and post-development stormwater runoff flows for the Costco Escondido project. This study will verify that the proposed development will not generate an increase of stormwater runoff than existing conditions, preventing an impact to the existing storm drainage facilities downstream. Per the City of Escondido requirements, the criteria used for this drainage study is the 2016 Escondido Storm Water Design Manual.

## 1.1 Project Location

The site is bordered by Beethoven Drive to the north and east, Westfield North County Mall and Via Rancho Parkway to the south, and Interstate 15 to the west. See Figure 1 below for project vicinity.

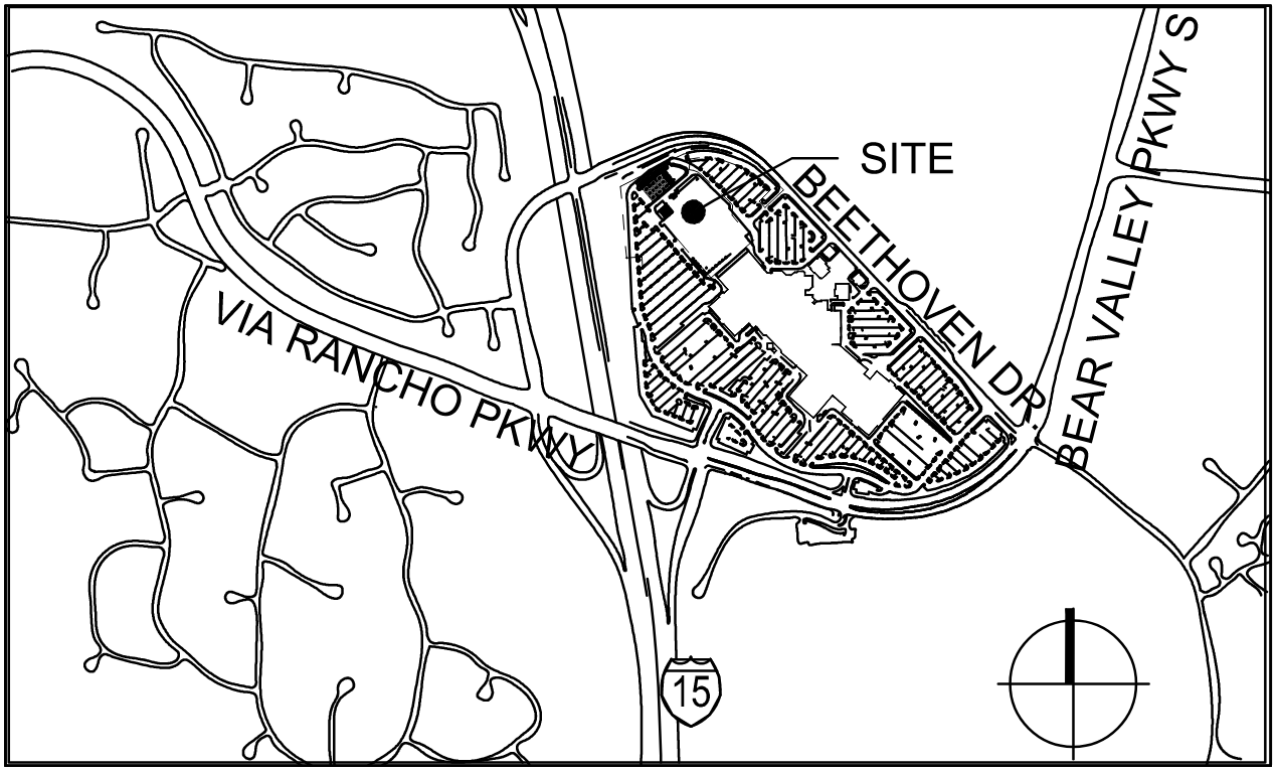


Figure 1. Vicinity Map

## 1.2 Existing Conditions

The existing site has three main storm drain lines that carry stormwater off-site. The first, located north and east of the existing Sears building, is a 24-in RCP pipe that collects runoff from northern & eastern parking lots as well as eastern building roof down spouts.

The second RCP line varies between 12-21" and runs along the north and western building frontage and picks up storm water from building truck docks and building down spouts. Once this line runs south past the Sears building, it continues to pick up drainage from offsite including Westfield Mall downspouts and landscaped areas.

The third line is a 24" RCP that runs along the west side of the site and collects storm water via curb inlets and grated inlets of the parking areas. Additionally, there is a 24" line that picks up runoff from the adjacent Interstate 15 to the west and connects to the on-site storm drain system.

See Existing Hydrology Map in Appendix 1 of this report for reference.

## 1.3 Proposed Conditions

The project proposes to modify, extend, and connect to each of the existing storm drain mains on site to carry storm water off site. The most northerly storm drain line will be demolished upstream of the manhole located in the northern parking lot. A new system consisting of three curb inlets will be constructed and connected at the same storm drain manhole.

The central storm drain line will be removed up to the 90-degree bend at the corner of the parking lot between the proposed Costco project and Westfield Mall. Upstream of the elbow, a grated inlet and several roof drain connections will tie into a proposed storm drain line.

The western most storm drain line will be demolished north of the 24" lateral from Interstate 15. This lateral will continue to take storm water from off-site. Additional storm drain will be added to this line and will include four curb inlets and one grated inlet. Connection to the existing line will be made at the southwest boundary of the project site.

See Proposed Hydrology Map in Appendix 2 of this report for reference.

# 2. METHODOLOGY

## 2.1 Rational Method

As mentioned previously, runoff on the project site was calculated for the 100-year storm event. Runoff was calculated using the Modified Rational Method equation below:

$Q = C \times I \times A$

Where:
Q = Flow rate in cubic feet per second (cfs)
C = Runoff coefficient
I = Rainfall Intensity in inches per hour (in/hr)
A = Drainage basin area in acres, (ac)

Modified Rational Method calculations were performed using the Advanced Engineering Software AES 2012) computer program. To perform the hydrology routing, the total watershed area was divided into sub-areas which discharge at designated nodes. The procedure for the sub-area summation model is as follows:

(1) Subdivide the watershed into an initial sub-area (generally 1 lot) and subsequent sub- areas, which are generally less than 10 acres in size. Assign upstream and downstream node numbers to each sub-area.

(2) Estimate an initial $T_c$ by using the appropriate nomograph or overland flow velocity estimation. The minimum $T_c$ considered is 5.0 minutes.

(3) Using the initial $T_c$, determine the corresponding values of I. Then Q = CIA.

(4) Using Q, estimate the travel time between this node and the next by Manning's equation as applied to particular channel or conduit linking the two nodes. Then, repeat the calculation for Q based on the revised intensity (which is a function of the revised time of concentration)

The nodes are joined together by links, which may be street gutter flows, drainage swales, drainage ditches, pipe flow, or various channel flows. The AES 2014 computer software sub-area menu is as follows:

SUBAREA HYDROLOGIC PROCESS

1. Confluence analysis at node.
2. Initial sub-area analysis (including time of concentration calculation).
3. Pipe flow travel time (computer estimated).
4. Pipe flow travel time (user specified).
5. Trapezoidal channel travel time.
6. Street flow analysis through sub-area.
7. User-specified information at node.
8. Addition of sub-area runoff to main line.
9. V-gutter flow through area.
10. Copy main stream data to memory bank
11. Confluence main stream data with a memory bank
12. Clear a memory bank

At the confluence point of two or more basins, the following procedure is used to combine peak flow rates to account for differences in the basin's times of concentration. This adjustment is based on the assumption that each basin's hydrographs are triangular in shape.

(1). If the collection streams have the same times of concentration, then the Q values are directly summed,

$$Q_p = Q_a + Q_b; \; T_p = T_a = T_b$$

(2). If the collection streams have different times of concentration, the smaller of the tributary Q values may be adjusted as follows:

(i). The most frequent case is where the collection stream with the longer time of concentration has the larger Q. The smaller Q value is adjusted by a ratio of rainfall intensities.

$$Q_p = Q_b + Q_a (I_b/I_a); \; T_p = T_a$$

(ii). In some cases, the collection stream with the shorter time of concentration has the larger Q. Then the smaller Q is adjusted by a ratio of the T values.

$$Q_p = Q_b + Q_a (T_b/T_a); \; T_p = T_b$$

## 2.2 Runoff Coefficient

The runoff coefficient, C-values, used to calculate 100-year peak-flows for the existing and proposed conditions were calculated from values provided on Table A-1 in the City of San Diego Drainage Design Manual included in Appendix 3 of this report.

## 2.3 Rainfall Intensity

Rainfall intensity was determined by AES software using the Intensity-Duration Chart per Figure A-1 of the SDDDM.

# 3. CALCULATIONS/RESULTS

## 3.1 Peak Flow Comparison

Table 1 below summarizes the results of the AES calculations which are provided in the Appendices 4 and 5 of this report.

Table 1. Peak Flow Rate Comparison

| HYDROLOGY SUMMARY | | | | |
|---|---|---|---|---|
| 100 YEAR PEAK FLOW | | | | |
| OUTLET | EXISTING | | PROPOSED | |
| ID # | FLOW (CFS) | AREA (ACRE) | FLOW (CFS) | AREA (ACRE) |
| 1 | 51.42 | 6.4 | 51.26 | 6.4 |
| 2 | 12.24 | 2.0 | 13.92 | 2.0 |
| 3 | 86.76 | 11.0 | 82.96 | 11.0 |

# 4. CONCLUSION

The subject property will mimic the existing drainage patterns to the maximum extent practicable. As shown in the analysis, two of the three on site storm drain systems will not increase the overall 100 year storm runoff flow from the site. The third storm drain (Outlet 2) will increase slightly over existing condition due to an increase in area size.

Hydromodification will be implemented on site to reduce the total flow on existing downstream storm drain systems. The design and analysis will be included in an accompanying Storm Water Quality Management Report.

# APPENDIX 1

# EXISTING HYDROLOGY MAP

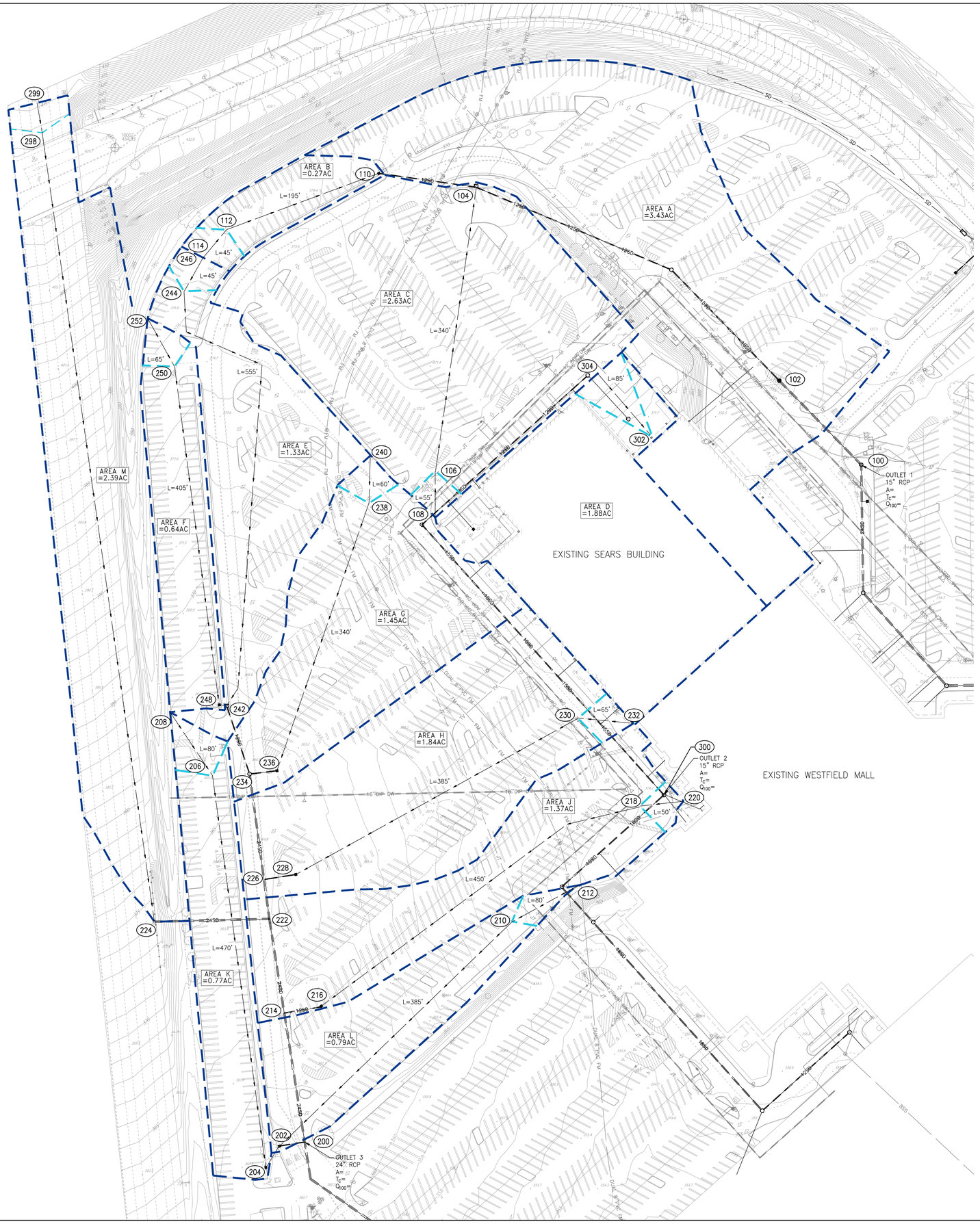


## LEGEND

EXISTING CONTOURS — 100

BASIN BOUNDARY

INITIAL SUBAREA

FLOW PATH

HYDROLOGY NODE — 130

EXISTING STORM DRAIN — 24SD

BASIN AREA — AREA =X.XXAC

50' 0' 25' 50' 100'

SCALE: 1" = 50'

# COSTCO ESCONDIDO

## EXISTING HYDROLOGY MAP

| REVISIONS | | | | | |
|---|---|---|---|---|---|
| NO. | INIT. | DATE | DESCRIPTION | APP'D | DATE |
| | | | | | |

FUSCOE ENGINEERING
6390 Greenwich Dr., Suite 170
San Diego, California 92122
tel 858.554.1500 ◦ fax 858.597.0335
www.fuscoe.com

JOB NO. 756-101

DRAWN BY: MJL

SHEET 1 of 1

F:\PROJECTS\756\101_SUPPORT FILES\EXISTING\HYDROLOGY\756-101 EXISTINGHYDROLOGY.DWG (09-02-22 2:35:10PM) Plotted by: mmata

# APPENDIX 2

# PROPOSED HYDROLOGY MAP

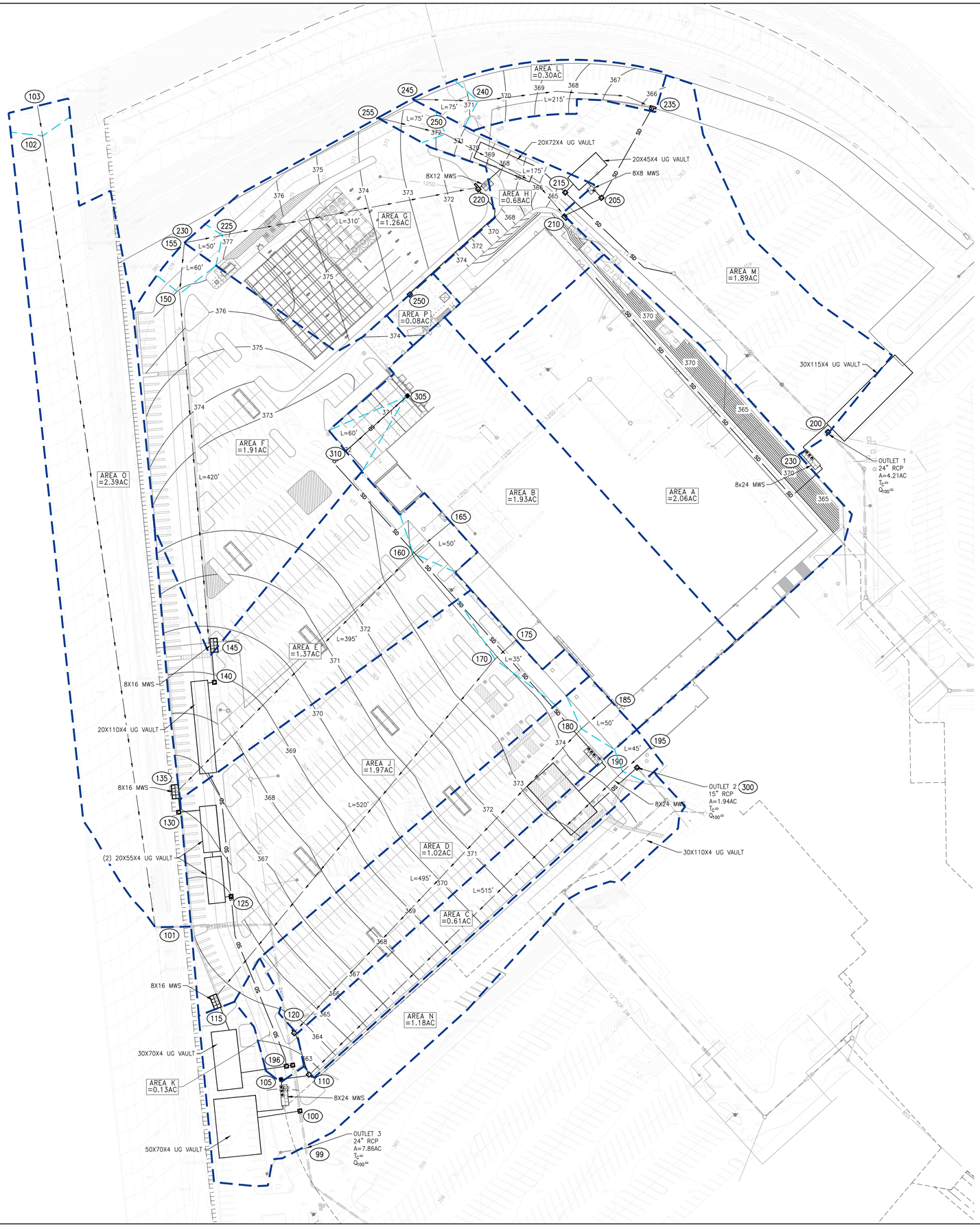


## LEGEND

- EXISTING CONTOURS — 100
- BASIN BOUNDARY
- INITIAL SUBAREA
- INTIAL AREA LIMITS
- FLOW PATH
- HYDROLOGY NODE — 130
- EXISTING STORM DRAIN — SD
- PROPOSED STORM DRAIN — SD
- BASIN AREA — AREA =X.XXAC

50' 0' 25' 50' 100'

SCALE: 1" = 50'

# COSTCO ESCONDIDO

## PROPOSED HYDROLOGY MAP

| REVISIONS | | | | | |
|---|---|---|---|---|---|
| NO. | INIT. | DATE | DESCRIPTION | APP'D | DATE |

FUSCOE ENGINEERING
6390 Greenwich Dr., Suite 170
San Diego, California 92122
tel 858.554.1500 ◦ fax 858.597.0335
www.fuscoe.com

JOB NO. 756-101
DRAWN BY: MJL
SHEET 1 of 1

P:\PROJECTS\756101_SUPPORT FILES\DWG\HYDROLOGY\756-101 PROPHYDROLOGY.DWG [00-06-22 8:41:14AM] Plotted by: mmoon

# APPENDIX 3

# RUNOFF CALCULATIONS

**Table A-1. Runoff Coefficients for Rational Method**

| Land Use | Runoff Coefficient (C) |
|---|---|
| | Soil Type [1] |
| **Residential:** | |
| Single Family | 0.55 |
| Multi-Units | 0.70 |
| Mobile Homes | 0.65 |
| Rural (lots greater than ½ acre) | 0.45 |
| **Commercial** [2] | |
| 80% Impervious | 0.85 |
| **Industrial** [2] | |
| 90% Impervious | 0.95 |

**Note:**
[1] Type D soil to be used for all areas.
[2] Where actual conditions deviate significantly from the tabulated imperviousness values of 80% or 90%, the values given for coefficient C, may be revised by multiplying 80% or 90% by the ratio of actual imperviousness to the tabulated imperviousness. However, in case shall the final coefficient be less than 0.50. For example: Consider commercial property on D soil.

Actual imperviousness = 50%
Tabulated imperviousness = 80%
Revised C = (50/80) x 0.85 = 0.53

The values in Table A–1 are typical for urban areas. However, if the basin contains rural or agricultural land use, parks, golf courses, or other types of nonurban land use that are expected to be permanent, the appropriate value should be selected based upon the soil and cover and approved by the City.

## A.1.3. Rainfall Intensity

The rainfall intensity (I) is the rainfall in inches per hour (in/hr.) for a duration equal to the $T_C$ for a selected storm frequency. Once a particular storm frequency has been selected for design and a $T_C$ calculated for the drainage area, the rainfall intensity can be determined from the Intensity-Duration-Frequency Design Chart (Figure A-1).

# APPENDIX 4

# EXISTING HYDROLOGY CALCULATIONS

**Job Name:** Costco Escondido
**Job #:** 756-101
**Run Name:**
**Date:** 8/29/2022

Existing Condition - 100yr Storm Event

| Node to Node | | Code | Elev 1 (feet) | Elev 2 (feet) | Length (feet) | Runoff Coeff. | Area (ac.) | Comments | BANK | | |
|---|---|---|---|---|---|---|---|---|---|---|---|
| | | | | | | | | | 1 | 2 | 3 |
| 114 | 112 | 2 | 377.5 | 377.0 | 45 | 0.95 | 0.05 | INITIAL AREA | | | |
| 112 | 110 | 6 | 377.0 | 372.2 | 195 | 0.95 | 0.27 | STREET FLOW, SUBAREA B | | | |
| 110 | 104 | 3 | 368.5 | 364.6 | 115 | | | PIPE FLOW | | | |
| 104 | 104 | 1 | | | | | | CONFLUENCE 1 OF 2 | | | |
| | | | | | | | | | | | |
| 108 | 106 | 2 | 375.0 | 374.0 | 55 | 0.95 | 0.04 | INITIAL AREA | | | |
| 106 | 104 | 6 | 374.0 | 368.2 | 340 | 0.95 | 2.63 | STREET FLOW, SUBAREA C | | | |
| 104 | 104 | 1 | | | | | | CONFLUENCE 2 OF 2 | | | |
| 104 | 102 | 3 | 364.6 | 344.9 | 435 | | | PIPE FLOW | | | |
| 102 | 102 | 8 | | | | 0.95 | 3.43 | ADD SUBAREA A | | | |
| 102 | 100 | 3 | 344.9 | 343.7 | 140 | | | PIPE FLOW | | | |
| 100 | 100 | 10 | | | | | | BANK 1 | X | | |
| | | | | | | | | | | | |
| 246 | 244 | 2 | 377.5 | 376.8 | 45 | 0.95 | 0.05 | INITIAL AREA | | | |
| 244 | 242 | 6 | 376.8 | 365.5 | 555 | 0.95 | 1.33 | STREET FLOW, SUBAREA E | | | |
| 242 | 242 | 1 | | | | | | CONFLUENCE 1 OF 2 | | | |
| | | | | | | | | | | | |
| 252 | 250 | 2 | 377.0 | 375.1 | 65 | 0.95 | 0.05 | INITIAL AREA | | | |
| 250 | 248 | 6 | 375.1 | 366.8 | 405 | 0.95 | 0.64 | STREET FLOW, SUBAREA F | | | |
| 248 | 242 | 3 | 363.0 | 361.5 | 5 | | | PIPE FLOW | | | |
| 242 | 242 | 1 | | | | | | CONFLUENCE 2 OF 2 | | | |
| 242 | 234 | 3 | 361.5 | 354.9 | 80 | | | PIPE FLOW | | | |
| 234 | 234 | 1 | | | | | | CONFLUENCE 1 OF 2 | | | |
| | | | | | | | | | | | |
| 240 | 238 | 2 | 374.2 | 373.3 | 60 | 0.95 | 0.05 | INITIAL AREA | | | |
| 238 | 236 | 6 | 373.3 | 364.3 | 340 | 0.95 | 1.45 | STREET FLOW, SUBAREA G | | | |
| 236 | 234 | 3 | 360.2 | 354.9 | 30 | | | PIPE FLOW | | | |
| 234 | 234 | 1 | | | | | | CONFLUENCE 2 OF 2 | | | |
| 234 | 226 | 3 | 354.9 | 353.8 | 125 | | | PIPE FLOW | | | |
| 226 | 226 | 1 | | | | | | CONFLUENCE 1 OF 2 | | | |
| | | | | | | | | | | | |
| 232 | 230 | 2 | 374.5 | 373.5 | 65 | 0.95 | 0.05 | INITIAL AREA | | | |
| 230 | 228 | 6 | 373.5 | 363.3 | 385 | 0.95 | 1.84 | STREET FLOW, SUBAREA H | | | |
| 228 | 226 | 3 | 359.4 | 353.8 | 40 | | | PIPE FLOW | | | |
| 226 | 226 | 1 | | | | | | CONFLUENCE 2 OF 2 | | | |
| 226 | 222 | 3 | 353.8 | 353.3 | 50 | | | PIPE FLOW | | | |
| 222 | 222 | 1 | | | | | | CONFLUENCE 1 OF 2 | | | |
| | | | | | | | | | | | |
| 299 | 298 | 2 | 415.2 | 413.7 | 40 | 0.95 | 0.05 | INITIAL SUBAREA | | | |
| 298 | 224 | 6 | 413.7 | 374.0 | 950 | 0.95 | 2.39 | STREET FLOW, ADD SUBAREA M | | | |
| 224 | 222 | 3 | 354.7 | 353.3 | 110 | | | PIPE FLOW | | | |
| 222 | 222 | 1 | | | | | | CONFLUENCE 2 OF 2 | | | |
| 222 | 214 | 3 | 353.3 | 352.5 | 115 | | | PIPE FLOW | | | |
| 214 | 214 | 1 | | | | | | CONFLUENCE 1 OF 2 | | | |

| | | | | | | | | | | | |
|---|---|---|---|---|---|---|---|---|---|---|---|
| 220 | 218 | 2 | 374.8 | 374.0 | 50 | 0.95 | 0.04 | INITIAL AREA | | | |
| 218 | 216 | 6 | 374.0 | 362.5 | 450 | 0.95 | 1.37 | STREET FLOW, SUBAREA J | | | |
| 216 | 214 | 3 | 358.3 | 352.5 | 45 | | | PIPE FLOW | | | |
| 214 | 214 | 1 | | | | | | CONFLUENCE 2 OF 2 | | | |
| 214 | 200 | 3 | 352.5 | 350.9 | 155 | | | PIPE FLOW | | | |
| 200 | 200 | 10 | | | | | | SAVE TO BANK 2 | | X | |
| | | | | | | | | | | | |
| 212 | 210 | 2 | 372.8 | 370.3 | 80 | 0.95 | 0.04 | INITIAL AREA | | | |
| 210 | 202 | 6 | 370.3 | 360.5 | 385 | 0.95 | 0.79 | STREET FLOW, SUBAREA L | | | |
| 202 | 202 | 1 | | | | | | CONFLUENCE 1 OF 2 | | | |
| | | | | | | | | | | | |
| 208 | 206 | 2 | 368.0 | 365.7 | 80 | 0.95 | 0.07 | INITIAL AREA | | | |
| 206 | 204 | 6 | 365.7 | 360.4 | 470 | 0.95 | 0.77 | STREET FLOW, SUBAREA K | | | |
| 204 | 202 | 3 | 356.2 | 355.7 | 30 | | | PIPE FLOW | | | |
| 202 | 202 | 1 | | | | | | CONFLUENCE 2 OF 2 | | | |
| 202 | 200 | 3 | 355.7 | 350.9 | 30 | | | PIPE FLOW | | | |
| 200 | 200 | 11 | | | | | | BANK 2 | | X | |
| | | | | | | | | | | | |
| 304 | 302 | 2 | 374.8 | 371.3 | 85 | 0.95 | 0.08 | INITIAL AREA | | | |
| 302 | 300 | 3 | 367.3 | 364.3 | 805 | | | PIPE FLOW | | | |
| 300 | 300 | 8 | | | | 0.95 | 1.88 | ADD SUBAREA D | | | |
| 300 | 300 | 10 | | | | | | BANK 3 | | | X |

```
**************************************************************************

        RATIONAL METHOD HYDROLOGY COMPUTER PROGRAM PACKAGE
        Reference: SAN DIEGO COUNTY FLOOD CONTROL DISTRICT
                2003,1985,1981 HYDROLOGY MANUAL
      (c) Copyright 1982-2016 Advanced Engineering Software (aes)
        Ver. 23.0 Release Date: 07/01/2016  License ID 1355

                Analysis prepared by:

                 Fuscoe Engineering
               6390 Greenwich Drive Suite 170
                 San Diego, CA 92122


 ************************* DESCRIPTION OF STUDY *************************
* COSTCO ESCONDIDO                                                      *
* 100 YR EXISTING CONDITION                                             *
*                                                                       *
 *************************************************************************

  FILE NAME: CE-EXIST.DAT
  TIME/DATE OF STUDY: 12:29 09/02/2022
-------------------------------------------------------------------------
  USER SPECIFIED HYDROLOGY AND HYDRAULIC MODEL INFORMATION:
-------------------------------------------------------------------------
  2003 SAN DIEGO MANUAL CRITERIA

  USER SPECIFIED STORM EVENT(YEAR) = 100.00
  6-HOUR DURATION PRECIPITATION (INCHES) =   3.200
  SPECIFIED MINIMUM PIPE SIZE(INCH) =  12.00
  SPECIFIED PERCENT OF GRADIENTS(DECIMAL) TO USE FOR FRICTION SLOPE = 0.90
  SAN DIEGO HYDROLOGY MANUAL "C"-VALUES USED FOR RATIONAL METHOD
  NOTE: USE MODIFIED RATIONAL METHOD PROCEDURES FOR CONFLUENCE ANALYSIS
  *USER-DEFINED STREET-SECTIONS FOR COUPLED PIPEFLOW AND STREETFLOW MODEL*
    HALF-  CROWN TO   STREET-CROSSFALL:   CURB  GUTTER-GEOMETRIES:  MANNING
    WIDTH  CROSSFALL  IN-  / OUT-/PARK-  HEIGHT  WIDTH  LIP   HIKE  FACTOR
NO.  (FT)    (FT)    SIDE / SIDE/ WAY    (FT)    (FT)  (FT)  (FT)    (n)
===  =====  =========  =================  ======  ===== ====== ===== =======
  1   20.0     12.0    0.020/0.020/0.020   0.50    1.50 0.0313 0.125 0.0150

  GLOBAL STREET FLOW-DEPTH CONSTRAINTS:
    1. Relative Flow-Depth =  0.00 FEET
       as (Maximum Allowable Street Flow Depth) - (Top-of-Curb)
    2. (Depth)*(Velocity) Constraint =  6.0 (FT*FT/S)
  *SIZE PIPE WITH A FLOW CAPACITY GREATER THAN
   OR EQUAL TO THE UPSTREAM TRIBUTARY PIPE.*
```

```
****************************************************************************
 FLOW PROCESS FROM NODE    114.00 TO NODE    112.00 IS CODE =  21
----------------------------------------------------------------------------
 >>>>>RATIONAL METHOD INITIAL SUBAREA ANALYSIS<<<<<
============================================================================
 *USER SPECIFIED(SUBAREA):
 USER-SPECIFIED RUNOFF COEFFICIENT = .9500
 S.C.S. CURVE NUMBER (AMC II) =   0
 INITIAL SUBAREA FLOW-LENGTH(FEET) =    45.00
 UPSTREAM ELEVATION(FEET) =    377.50
 DOWNSTREAM ELEVATION(FEET) =    377.00
 ELEVATION DIFFERENCE(FEET) =      0.50
 SUBAREA OVERLAND TIME OF FLOW(MIN.) =    1.749
  100 YEAR RAINFALL INTENSITY(INCH/HOUR) =  8.431
 NOTE: RAINFALL INTENSITY IS BASED ON Tc = 5-MINUTE.
 SUBAREA RUNOFF(CFS) =      0.40
 TOTAL AREA(ACRES) =      0.05   TOTAL RUNOFF(CFS) =      0.40

****************************************************************************
 FLOW PROCESS FROM NODE    112.00 TO NODE    110.00 IS CODE =  62
----------------------------------------------------------------------------
 >>>>>COMPUTE STREET FLOW TRAVEL TIME THRU SUBAREA<<<<<
 >>>>>(STREET TABLE SECTION #  1 USED)<<<<<
============================================================================
 UPSTREAM ELEVATION(FEET) =  377.00  DOWNSTREAM ELEVATION(FEET) =  372.20
 STREET LENGTH(FEET) =   195.00   CURB HEIGHT(INCHES) =  6.0
 STREET HALFWIDTH(FEET) = 20.00

 DISTANCE FROM CROWN TO CROSSFALL GRADEBREAK(FEET) =  12.00
 INSIDE STREET CROSSFALL(DECIMAL) =  0.020
 OUTSIDE STREET CROSSFALL(DECIMAL)  =  0.020

 SPECIFIED NUMBER OF HALFSTREETS CARRYING RUNOFF =  2
 STREET PARKWAY CROSSFALL(DECIMAL)  =  0.020
 Manning's FRICTION FACTOR for Streetflow Section(curb-to-curb) =   0.0150
 Manning's FRICTION FACTOR for Back-of-Walk Flow Section =   0.0200

  **TRAVEL TIME COMPUTED USING ESTIMATED FLOW(CFS) =       1.48
  STREETFLOW MODEL RESULTS USING ESTIMATED FLOW:
  STREET FLOW DEPTH(FEET) =  0.21
  HALFSTREET FLOOD WIDTH(FEET) =    4.17
  AVERAGE FLOW VELOCITY(FEET/SEC.) =    2.54
  PRODUCT OF DEPTH&VELOCITY(FT*FT/SEC.) =    0.53
 STREET FLOW TRAVEL TIME(MIN.) =   1.28   Tc(MIN.) =    3.03
  100 YEAR RAINFALL INTENSITY(INCH/HOUR) =  8.431
 NOTE: RAINFALL INTENSITY IS BASED ON Tc = 5-MINUTE.
 *USER SPECIFIED(SUBAREA):
```

```
 USER-SPECIFIED RUNOFF COEFFICIENT = .9500
 S.C.S. CURVE NUMBER (AMC II) =  0
 AREA-AVERAGE RUNOFF COEFFICIENT =  0.950
 SUBAREA AREA(ACRES) =    0.27     SUBAREA RUNOFF(CFS) =    2.16
 TOTAL AREA(ACRES) =       0.3      PEAK FLOW RATE(CFS) =      2.56

 END OF SUBAREA STREET FLOW HYDRAULICS:
 DEPTH(FEET) = 0.24   HALFSTREET FLOOD WIDTH(FEET) =   5.89
 FLOW VELOCITY(FEET/SEC.) =  2.75   DEPTH*VELOCITY(FT*FT/SEC.) =   0.67
 LONGEST FLOWPATH FROM NODE    114.00 TO NODE    110.00 =     240.00 FEET.

****************************************************************************
 FLOW PROCESS FROM NODE    110.00 TO NODE    104.00 IS CODE =  31
----------------------------------------------------------------------------
 >>>>>COMPUTE PIPE-FLOW TRAVEL TIME THRU SUBAREA<<<<<
 >>>>>USING COMPUTER-ESTIMATED PIPESIZE (NON-PRESSURE FLOW)<<<<<
============================================================================
 ELEVATION DATA: UPSTREAM(FEET) =   368.50  DOWNSTREAM(FEET) =   364.60
 FLOW LENGTH(FEET) =   115.00   MANNING'S N =  0.013
 ESTIMATED PIPE DIAMETER(INCH) INCREASED TO 12.000
 DEPTH OF FLOW IN  12.0 INCH PIPE IS   5.4 INCHES
 PIPE-FLOW VELOCITY(FEET/SEC.) =   7.55
 ESTIMATED PIPE DIAMETER(INCH) =  12.00    NUMBER OF PIPES =   1
 PIPE-FLOW(CFS) =      2.56
 PIPE TRAVEL TIME(MIN.) =   0.25    Tc(MIN.) =    3.28
 LONGEST FLOWPATH FROM NODE    114.00 TO NODE    104.00 =     355.00 FEET.

****************************************************************************
 FLOW PROCESS FROM NODE    104.00 TO NODE    104.00 IS CODE =   1
----------------------------------------------------------------------------
 >>>>>DESIGNATE INDEPENDENT STREAM FOR CONFLUENCE<<<<<
============================================================================
 TOTAL NUMBER OF STREAMS =  2
 CONFLUENCE VALUES USED FOR INDEPENDENT STREAM  1 ARE:
 TIME OF CONCENTRATION(MIN.) =    3.28
 RAINFALL INTENSITY(INCH/HR) =   8.43
 TOTAL STREAM AREA(ACRES) =     0.32
 PEAK FLOW RATE(CFS) AT CONFLUENCE =      2.56

****************************************************************************
 FLOW PROCESS FROM NODE    108.00 TO NODE    106.00 IS CODE =  21
----------------------------------------------------------------------------
 >>>>>RATIONAL METHOD INITIAL SUBAREA ANALYSIS<<<<<
============================================================================
 *USER SPECIFIED(SUBAREA):
 USER-SPECIFIED RUNOFF COEFFICIENT = .9500
 S.C.S. CURVE NUMBER (AMC II) =  0
 INITIAL SUBAREA FLOW-LENGTH(FEET) =    55.00
```

```
 UPSTREAM ELEVATION(FEET) =    375.00
 DOWNSTREAM ELEVATION(FEET) =    374.00
 ELEVATION DIFFERENCE(FEET) =      1.00
 SUBAREA OVERLAND TIME OF FLOW(MIN.) =    1.641
  100 YEAR RAINFALL INTENSITY(INCH/HOUR) =  8.431
 NOTE: RAINFALL INTENSITY IS BASED ON Tc = 5-MINUTE.
 SUBAREA RUNOFF(CFS) =      0.32
 TOTAL AREA(ACRES) =      0.04   TOTAL RUNOFF(CFS) =      0.32

****************************************************************************
 FLOW PROCESS FROM NODE    106.00 TO NODE    104.00 IS CODE =  62
----------------------------------------------------------------------------
 >>>>>COMPUTE STREET FLOW TRAVEL TIME THRU SUBAREA<<<<<
 >>>>>(STREET TABLE SECTION #  1 USED)<<<<<
============================================================================
 UPSTREAM ELEVATION(FEET) =  374.00  DOWNSTREAM ELEVATION(FEET) =  368.20
 STREET LENGTH(FEET) =   340.00   CURB HEIGHT(INCHES) =  6.0
 STREET HALFWIDTH(FEET) = 20.00

 DISTANCE FROM CROWN TO CROSSFALL GRADEBREAK(FEET) =  12.00
 INSIDE STREET CROSSFALL(DECIMAL) =  0.020
 OUTSIDE STREET CROSSFALL(DECIMAL)  =  0.020

 SPECIFIED NUMBER OF HALFSTREETS CARRYING RUNOFF =  2
 STREET PARKWAY CROSSFALL(DECIMAL)  =  0.020
 Manning's FRICTION FACTOR for Streetflow Section(curb-to-curb) =   0.0150
 Manning's FRICTION FACTOR for Back-of-Walk Flow Section =   0.0200

  **TRAVEL TIME COMPUTED USING ESTIMATED FLOW(CFS) =      10.85
  STREETFLOW MODEL RESULTS USING ESTIMATED FLOW:
  STREET FLOW DEPTH(FEET) =  0.37
  HALFSTREET FLOOD WIDTH(FEET) =   12.36
  AVERAGE FLOW VELOCITY(FEET/SEC.) =    3.30
  PRODUCT OF DEPTH&VELOCITY(FT*FT/SEC.) =    1.23
 STREET FLOW TRAVEL TIME(MIN.) =   1.72   Tc(MIN.) =    3.36
  100 YEAR RAINFALL INTENSITY(INCH/HOUR) =  8.431
 NOTE: RAINFALL INTENSITY IS BASED ON Tc = 5-MINUTE.
 *USER SPECIFIED(SUBAREA):
 USER-SPECIFIED RUNOFF COEFFICIENT = .9500
 S.C.S. CURVE NUMBER (AMC II) =   0
 AREA-AVERAGE RUNOFF COEFFICIENT =  0.950
 SUBAREA AREA(ACRES) =    2.63     SUBAREA RUNOFF(CFS) =   21.07
 TOTAL AREA(ACRES) =       2.7       PEAK FLOW RATE(CFS) =      21.39

 END OF SUBAREA STREET FLOW HYDRAULICS:
 DEPTH(FEET) = 0.45   HALFSTREET FLOOD WIDTH(FEET) =  16.20
 FLOW VELOCITY(FEET/SEC.) =  3.90   DEPTH*VELOCITY(FT*FT/SEC.) =   1.76
 LONGEST FLOWPATH FROM NODE    108.00 TO NODE    104.00 =     395.00 FEET.
```

```
****************************************************************************
 FLOW PROCESS FROM NODE    104.00 TO NODE    104.00 IS CODE =   1
----------------------------------------------------------------------------
 >>>>>DESIGNATE INDEPENDENT STREAM FOR CONFLUENCE<<<<<
 >>>>>AND COMPUTE VARIOUS CONFLUENCED STREAM VALUES<<<<<
============================================================================
 TOTAL NUMBER OF STREAMS =  2
 CONFLUENCE VALUES USED FOR INDEPENDENT STREAM  2 ARE:
 TIME OF CONCENTRATION(MIN.) =    3.36
 RAINFALL INTENSITY(INCH/HR) =   8.43
 TOTAL STREAM AREA(ACRES) =     2.67
 PEAK FLOW RATE(CFS) AT CONFLUENCE =     21.39

 ** CONFLUENCE DATA **
 STREAM     RUNOFF      Tc     INTENSITY     AREA
 NUMBER      (CFS)    (MIN.)   (INCH/HOUR)    (ACRE)
   1        2.56     3.28       8.431         0.32
   2       21.39     3.36       8.431         2.67

 RAINFALL INTENSITY AND TIME OF CONCENTRATION RATIO
 CONFLUENCE FORMULA USED FOR  2 STREAMS.

 ** PEAK FLOW RATE TABLE **
 STREAM     RUNOFF      Tc     INTENSITY
 NUMBER      (CFS)    (MIN.)   (INCH/HOUR)
   1       23.46     3.28       8.431
   2       23.95     3.36       8.431

 COMPUTED CONFLUENCE ESTIMATES ARE AS FOLLOWS:
 PEAK FLOW RATE(CFS) =      23.95   Tc(MIN.) =    3.36
 TOTAL AREA(ACRES) =       3.0
 LONGEST FLOWPATH FROM NODE    108.00 TO NODE    104.00 =     395.00 FEET.

****************************************************************************
 FLOW PROCESS FROM NODE    104.00 TO NODE    102.00 IS CODE =  31
----------------------------------------------------------------------------
 >>>>>COMPUTE PIPE-FLOW TRAVEL TIME THRU SUBAREA<<<<<
 >>>>>USING COMPUTER-ESTIMATED PIPESIZE (NON-PRESSURE FLOW)<<<<<
============================================================================
 ELEVATION DATA: UPSTREAM(FEET) =   364.60  DOWNSTREAM(FEET) =   344.90
 FLOW LENGTH(FEET) =   435.00   MANNING'S N =  0.013
 DEPTH OF FLOW IN  21.0 INCH PIPE IS  13.6 INCHES
 PIPE-FLOW VELOCITY(FEET/SEC.) =  14.59
 ESTIMATED PIPE DIAMETER(INCH) =  21.00    NUMBER OF PIPES =   1
 PIPE-FLOW(CFS) =      23.95
 PIPE TRAVEL TIME(MIN.) =   0.50    Tc(MIN.) =    3.86
 LONGEST FLOWPATH FROM NODE    108.00 TO NODE    102.00 =     830.00 FEET.
```

```
****************************************************************************
 FLOW PROCESS FROM NODE    102.00 TO NODE    102.00 IS CODE =  81
----------------------------------------------------------------------------
 >>>>>ADDITION OF SUBAREA TO MAINLINE PEAK FLOW<<<<<
============================================================================
  100 YEAR RAINFALL INTENSITY(INCH/HOUR) =  8.431
 NOTE: RAINFALL INTENSITY IS BASED ON Tc = 5-MINUTE.
 *USER SPECIFIED(SUBAREA):
 USER-SPECIFIED RUNOFF COEFFICIENT = .9500
 S.C.S. CURVE NUMBER (AMC II) =  0
 AREA-AVERAGE RUNOFF COEFFICIENT = 0.9500
 SUBAREA AREA(ACRES) =    3.43   SUBAREA RUNOFF(CFS) =   27.47
 TOTAL AREA(ACRES) =       6.4   TOTAL RUNOFF(CFS) =     51.42
 TC(MIN.) =    3.86
****************************************************************************
 FLOW PROCESS FROM NODE    102.00 TO NODE    100.00 IS CODE =  31
----------------------------------------------------------------------------
 >>>>>COMPUTE PIPE-FLOW TRAVEL TIME THRU SUBAREA<<<<<
 >>>>>USING COMPUTER-ESTIMATED PIPESIZE (NON-PRESSURE FLOW)<<<<<
============================================================================
 ELEVATION DATA: UPSTREAM(FEET) =   344.90  DOWNSTREAM(FEET) =   343.70
 FLOW LENGTH(FEET) =   140.00   MANNING'S N =  0.013
 DEPTH OF FLOW IN  36.0 INCH PIPE IS  26.2 INCHES
 PIPE-FLOW VELOCITY(FEET/SEC.) =   9.35
 ESTIMATED PIPE DIAMETER(INCH) =  36.00    NUMBER OF PIPES =   1
 PIPE-FLOW(CFS) =     51.42
 PIPE TRAVEL TIME(MIN.) =   0.25    Tc(MIN.) =    4.11
 LONGEST FLOWPATH FROM NODE    108.00 TO NODE    100.00 =     970.00 FEET.

****************************************************************************
 FLOW PROCESS FROM NODE    100.00 TO NODE    100.00 IS CODE =  10
----------------------------------------------------------------------------
 >>>>>MAIN-STREAM MEMORY COPIED ONTO MEMORY BANK # 1 <<<<<
============================================================================

****************************************************************************
 FLOW PROCESS FROM NODE    246.00 TO NODE    244.00 IS CODE =  21
----------------------------------------------------------------------------
 >>>>>RATIONAL METHOD INITIAL SUBAREA ANALYSIS<<<<<
============================================================================
 *USER SPECIFIED(SUBAREA):
 USER-SPECIFIED RUNOFF COEFFICIENT = .9500
 S.C.S. CURVE NUMBER (AMC II) =  0
 INITIAL SUBAREA FLOW-LENGTH(FEET) =    45.00
 UPSTREAM ELEVATION(FEET) =    377.50
 DOWNSTREAM ELEVATION(FEET) =    376.80
```

```
 ELEVATION DIFFERENCE(FEET) =      0.70
 SUBAREA OVERLAND TIME OF FLOW(MIN.) =    1.563
  100 YEAR RAINFALL INTENSITY(INCH/HOUR) =  8.431
 NOTE: RAINFALL INTENSITY IS BASED ON Tc = 5-MINUTE.
 SUBAREA RUNOFF(CFS) =      0.40
 TOTAL AREA(ACRES) =      0.05   TOTAL RUNOFF(CFS) =      0.40

****************************************************************************
 FLOW PROCESS FROM NODE    244.00 TO NODE    242.00 IS CODE =  62
----------------------------------------------------------------------------
 >>>>>COMPUTE STREET FLOW TRAVEL TIME THRU SUBAREA<<<<<
 >>>>>(STREET TABLE SECTION #  1 USED)<<<<<
============================================================================
 UPSTREAM ELEVATION(FEET) =  376.80  DOWNSTREAM ELEVATION(FEET) =  365.50
 STREET LENGTH(FEET) =   555.00   CURB HEIGHT(INCHES) =  6.0
 STREET HALFWIDTH(FEET) = 20.00

 DISTANCE FROM CROWN TO CROSSFALL GRADEBREAK(FEET) =  12.00
 INSIDE STREET CROSSFALL(DECIMAL) =  0.020
 OUTSIDE STREET CROSSFALL(DECIMAL)  =  0.020

 SPECIFIED NUMBER OF HALFSTREETS CARRYING RUNOFF =  2
 STREET PARKWAY CROSSFALL(DECIMAL)  =  0.020
 Manning's FRICTION FACTOR for Streetflow Section(curb-to-curb) =   0.0150
 Manning's FRICTION FACTOR for Back-of-Walk Flow Section =   0.0200

  **TRAVEL TIME COMPUTED USING ESTIMATED FLOW(CFS) =      5.73
  STREETFLOW MODEL RESULTS USING ESTIMATED FLOW:
  STREET FLOW DEPTH(FEET) =  0.31
  HALFSTREET FLOOD WIDTH(FEET) =    9.08
  AVERAGE FLOW VELOCITY(FEET/SEC.) =    3.04
  PRODUCT OF DEPTH&VELOCITY(FT*FT/SEC.) =    0.94
 STREET FLOW TRAVEL TIME(MIN.) =   3.04   Tc(MIN.) =    4.61
  100 YEAR RAINFALL INTENSITY(INCH/HOUR) =  8.431
 NOTE: RAINFALL INTENSITY IS BASED ON Tc = 5-MINUTE.
 *USER SPECIFIED(SUBAREA):
 USER-SPECIFIED RUNOFF COEFFICIENT = .9500
 S.C.S. CURVE NUMBER (AMC II) =   0
 AREA-AVERAGE RUNOFF COEFFICIENT =  0.950
 SUBAREA AREA(ACRES) =    1.33     SUBAREA RUNOFF(CFS) =   10.65
 TOTAL AREA(ACRES) =       1.4       PEAK FLOW RATE(CFS) =     11.05

 END OF SUBAREA STREET FLOW HYDRAULICS:
 DEPTH(FEET) = 0.37   HALFSTREET FLOOD WIDTH(FEET) =  11.98
 FLOW VELOCITY(FEET/SEC.) =  3.56   DEPTH*VELOCITY(FT*FT/SEC.) =   1.30
 LONGEST FLOWPATH FROM NODE    246.00 TO NODE    242.00 =     600.00 FEET.

****************************************************************************
```

```
 FLOW PROCESS FROM NODE    242.00 TO NODE    242.00 IS CODE =   1
----------------------------------------------------------------------------
 >>>>>DESIGNATE INDEPENDENT STREAM FOR CONFLUENCE<<<<<
============================================================================
 TOTAL NUMBER OF STREAMS =  2
 CONFLUENCE VALUES USED FOR INDEPENDENT STREAM  1 ARE:
 TIME OF CONCENTRATION(MIN.) =    4.61
 RAINFALL INTENSITY(INCH/HR) =   8.43
 TOTAL STREAM AREA(ACRES) =     1.38
 PEAK FLOW RATE(CFS) AT CONFLUENCE =     11.05

****************************************************************************
 FLOW PROCESS FROM NODE    252.00 TO NODE    250.00 IS CODE =  21
----------------------------------------------------------------------------
 >>>>>RATIONAL METHOD INITIAL SUBAREA ANALYSIS<<<<<
============================================================================
 *USER SPECIFIED(SUBAREA):
 USER-SPECIFIED RUNOFF COEFFICIENT = .9500
 S.C.S. CURVE NUMBER (AMC II) =   0
 INITIAL SUBAREA FLOW-LENGTH(FEET) =    65.00
 UPSTREAM ELEVATION(FEET) =    377.00
 DOWNSTREAM ELEVATION(FEET) =    375.10
 ELEVATION DIFFERENCE(FEET) =      1.90
 SUBAREA OVERLAND TIME OF FLOW(MIN.) =    1.522
  100 YEAR RAINFALL INTENSITY(INCH/HOUR) =  8.431
 NOTE: RAINFALL INTENSITY IS BASED ON Tc = 5-MINUTE.
 SUBAREA RUNOFF(CFS) =      0.40
 TOTAL AREA(ACRES) =      0.05   TOTAL RUNOFF(CFS) =      0.40

****************************************************************************
 FLOW PROCESS FROM NODE    250.00 TO NODE    248.00 IS CODE =  62
----------------------------------------------------------------------------
 >>>>>COMPUTE STREET FLOW TRAVEL TIME THRU SUBAREA<<<<<
 >>>>>(STREET TABLE SECTION #  1 USED)<<<<<
============================================================================
 UPSTREAM ELEVATION(FEET) =  375.10  DOWNSTREAM ELEVATION(FEET) =  366.80
 STREET LENGTH(FEET) =   405.00   CURB HEIGHT(INCHES) =  6.0
 STREET HALFWIDTH(FEET) = 20.00

 DISTANCE FROM CROWN TO CROSSFALL GRADEBREAK(FEET) =  12.00
 INSIDE STREET CROSSFALL(DECIMAL) =  0.020
 OUTSIDE STREET CROSSFALL(DECIMAL)  =  0.020

 SPECIFIED NUMBER OF HALFSTREETS CARRYING RUNOFF =  1
 STREET PARKWAY CROSSFALL(DECIMAL)  =  0.020
 Manning's FRICTION FACTOR for Streetflow Section(curb-to-curb) =   0.0150
 Manning's FRICTION FACTOR for Back-of-Walk Flow Section =   0.0200
```

```
 **TRAVEL TIME COMPUTED USING ESTIMATED FLOW(CFS) =      2.96
 STREETFLOW MODEL RESULTS USING ESTIMATED FLOW:
 STREET FLOW DEPTH(FEET) =  0.31
 HALFSTREET FLOOD WIDTH(FEET) =    9.17
 AVERAGE FLOW VELOCITY(FEET/SEC.) =    3.09
 PRODUCT OF DEPTH&VELOCITY(FT*FT/SEC.) =    0.96
STREET FLOW TRAVEL TIME(MIN.) =   2.19   Tc(MIN.) =    3.71
 100 YEAR RAINFALL INTENSITY(INCH/HOUR) =  8.431
NOTE: RAINFALL INTENSITY IS BASED ON Tc = 5-MINUTE.
*USER SPECIFIED(SUBAREA):
USER-SPECIFIED RUNOFF COEFFICIENT = .9500
S.C.S. CURVE NUMBER (AMC II) =   0
AREA-AVERAGE RUNOFF COEFFICIENT =  0.950
SUBAREA AREA(ACRES) =    0.64     SUBAREA RUNOFF(CFS) =    5.13
TOTAL AREA(ACRES) =       0.7       PEAK FLOW RATE(CFS) =       5.53

END OF SUBAREA STREET FLOW HYDRAULICS:
DEPTH(FEET) = 0.37   HALFSTREET FLOOD WIDTH(FEET) =  11.98
FLOW VELOCITY(FEET/SEC.) =  3.56   DEPTH*VELOCITY(FT*FT/SEC.) =   1.30
LONGEST FLOWPATH FROM NODE    252.00 TO NODE    248.00 =     470.00 FEET.

****************************************************************************
FLOW PROCESS FROM NODE    248.00 TO NODE    242.00 IS CODE =  31
----------------------------------------------------------------------------
>>>>>COMPUTE PIPE-FLOW TRAVEL TIME THRU SUBAREA<<<<<
>>>>>USING COMPUTER-ESTIMATED PIPESIZE (NON-PRESSURE FLOW)<<<<<
============================================================================
ELEVATION DATA: UPSTREAM(FEET) =   363.00  DOWNSTREAM(FEET) =   361.50
FLOW LENGTH(FEET) =     5.00   MANNING'S N =  0.013
ESTIMATED PIPE DIAMETER(INCH) INCREASED TO 12.000
DEPTH OF FLOW IN  12.0 INCH PIPE IS   4.5 INCHES
PIPE-FLOW VELOCITY(FEET/SEC.) =  20.59
ESTIMATED PIPE DIAMETER(INCH) =  12.00    NUMBER OF PIPES =   1
PIPE-FLOW(CFS) =       5.53
PIPE TRAVEL TIME(MIN.) =   0.00    Tc(MIN.) =    3.71
LONGEST FLOWPATH FROM NODE    252.00 TO NODE    242.00 =     475.00 FEET.

****************************************************************************
FLOW PROCESS FROM NODE    242.00 TO NODE    242.00 IS CODE =   1
----------------------------------------------------------------------------
>>>>>DESIGNATE INDEPENDENT STREAM FOR CONFLUENCE<<<<<
>>>>>AND COMPUTE VARIOUS CONFLUENCED STREAM VALUES<<<<<
============================================================================
TOTAL NUMBER OF STREAMS =  2
CONFLUENCE VALUES USED FOR INDEPENDENT STREAM  2 ARE:
TIME OF CONCENTRATION(MIN.) =    3.71
RAINFALL INTENSITY(INCH/HR) =   8.43
TOTAL STREAM AREA(ACRES) =     0.69
```

```
 PEAK FLOW RATE(CFS) AT CONFLUENCE =      5.53

 ** CONFLUENCE DATA **
 STREAM     RUNOFF      Tc     INTENSITY     AREA
 NUMBER      (CFS)    (MIN.)   (INCH/HOUR)   (ACRE)
    1       11.05    4.61       8.431        1.38
    2        5.53    3.71       8.431        0.69

 RAINFALL INTENSITY AND TIME OF CONCENTRATION RATIO
 CONFLUENCE FORMULA USED FOR  2 STREAMS.

 ** PEAK FLOW RATE TABLE **
 STREAM     RUNOFF      Tc     INTENSITY
 NUMBER      (CFS)    (MIN.)   (INCH/HOUR)
    1       14.43    3.71       8.431
    2       16.58    4.61       8.431

 COMPUTED CONFLUENCE ESTIMATES ARE AS FOLLOWS:
 PEAK FLOW RATE(CFS) =      16.58   Tc(MIN.) =    4.61
 TOTAL AREA(ACRES) =       2.1
 LONGEST FLOWPATH FROM NODE    246.00 TO NODE    242.00 =     600.00 FEET.

****************************************************************************
 FLOW PROCESS FROM NODE    242.00 TO NODE    234.00 IS CODE =  31
----------------------------------------------------------------------------
 >>>>>COMPUTE PIPE-FLOW TRAVEL TIME THRU SUBAREA<<<<<
 >>>>>USING COMPUTER-ESTIMATED PIPESIZE (NON-PRESSURE FLOW)<<<<<
============================================================================
 ELEVATION DATA: UPSTREAM(FEET) =   361.50  DOWNSTREAM(FEET) =   354.90
 FLOW LENGTH(FEET) =    80.00   MANNING'S N =  0.013
 DEPTH OF FLOW IN  15.0 INCH PIPE IS  11.6 INCHES
 PIPE-FLOW VELOCITY(FEET/SEC.) =  16.31
 ESTIMATED PIPE DIAMETER(INCH) =  15.00    NUMBER OF PIPES =   1
 PIPE-FLOW(CFS) =      16.58
 PIPE TRAVEL TIME(MIN.) =   0.08    Tc(MIN.) =    4.69
 LONGEST FLOWPATH FROM NODE    246.00 TO NODE    234.00 =     680.00 FEET.

****************************************************************************
 FLOW PROCESS FROM NODE    234.00 TO NODE    234.00 IS CODE =   1
----------------------------------------------------------------------------
 >>>>>DESIGNATE INDEPENDENT STREAM FOR CONFLUENCE<<<<<
============================================================================
 TOTAL NUMBER OF STREAMS =  2
 CONFLUENCE VALUES USED FOR INDEPENDENT STREAM  1 ARE:
 TIME OF CONCENTRATION(MIN.) =    4.69
 RAINFALL INTENSITY(INCH/HR) =   8.43
 TOTAL STREAM AREA(ACRES) =     2.07
 PEAK FLOW RATE(CFS) AT CONFLUENCE =     16.58
```

```
****************************************************************************
 FLOW PROCESS FROM NODE    240.00 TO NODE    238.00 IS CODE =  21
----------------------------------------------------------------------------
 >>>>>RATIONAL METHOD INITIAL SUBAREA ANALYSIS<<<<<
============================================================================
 *USER SPECIFIED(SUBAREA):
 USER-SPECIFIED RUNOFF COEFFICIENT = .9500
 S.C.S. CURVE NUMBER (AMC II) =   0
 INITIAL SUBAREA FLOW-LENGTH(FEET) =    60.00
 UPSTREAM ELEVATION(FEET) =    374.20
 DOWNSTREAM ELEVATION(FEET) =    373.30
 ELEVATION DIFFERENCE(FEET) =      0.90
 SUBAREA OVERLAND TIME OF FLOW(MIN.) =    1.827
  100 YEAR RAINFALL INTENSITY(INCH/HOUR) =  8.431
 NOTE: RAINFALL INTENSITY IS BASED ON Tc = 5-MINUTE.
 SUBAREA RUNOFF(CFS) =      0.40
 TOTAL AREA(ACRES) =      0.05   TOTAL RUNOFF(CFS) =      0.40

****************************************************************************
 FLOW PROCESS FROM NODE    238.00 TO NODE    236.00 IS CODE =  62
----------------------------------------------------------------------------
 >>>>>COMPUTE STREET FLOW TRAVEL TIME THRU SUBAREA<<<<<
 >>>>>(STREET TABLE SECTION #  1 USED)<<<<<
============================================================================
 UPSTREAM ELEVATION(FEET) =  373.30  DOWNSTREAM ELEVATION(FEET) =  364.30
 STREET LENGTH(FEET) =   340.00   CURB HEIGHT(INCHES) =  6.0
 STREET HALFWIDTH(FEET) = 20.00

 DISTANCE FROM CROWN TO CROSSFALL GRADEBREAK(FEET) =  12.00
 INSIDE STREET CROSSFALL(DECIMAL) =  0.020
 OUTSIDE STREET CROSSFALL(DECIMAL)  =  0.020

 SPECIFIED NUMBER OF HALFSTREETS CARRYING RUNOFF =  2
 STREET PARKWAY CROSSFALL(DECIMAL)  =  0.020
 Manning's FRICTION FACTOR for Streetflow Section(curb-to-curb) =   0.0150
 Manning's FRICTION FACTOR for Back-of-Walk Flow Section =   0.0200

  **TRAVEL TIME COMPUTED USING ESTIMATED FLOW(CFS) =       6.21
  STREETFLOW MODEL RESULTS USING ESTIMATED FLOW:
  STREET FLOW DEPTH(FEET) =  0.30
  HALFSTREET FLOOD WIDTH(FEET) =    8.89
  AVERAGE FLOW VELOCITY(FEET/SEC.) =    3.42
  PRODUCT OF DEPTH&VELOCITY(FT*FT/SEC.) =    1.04
 STREET FLOW TRAVEL TIME(MIN.) =   1.66   Tc(MIN.) =    3.49
  100 YEAR RAINFALL INTENSITY(INCH/HOUR) =  8.431
 NOTE: RAINFALL INTENSITY IS BASED ON Tc = 5-MINUTE.
 *USER SPECIFIED(SUBAREA):
```

```
 USER-SPECIFIED RUNOFF COEFFICIENT = .9500
 S.C.S. CURVE NUMBER (AMC II) =  0
 AREA-AVERAGE RUNOFF COEFFICIENT =  0.950
 SUBAREA AREA(ACRES) =    1.45     SUBAREA RUNOFF(CFS) =   11.61
 TOTAL AREA(ACRES) =       1.5      PEAK FLOW RATE(CFS) =     12.01

 END OF SUBAREA STREET FLOW HYDRAULICS:
 DEPTH(FEET) = 0.36   HALFSTREET FLOOD WIDTH(FEET) =  11.80
 FLOW VELOCITY(FEET/SEC.) =  3.98   DEPTH*VELOCITY(FT*FT/SEC.) =   1.44
 LONGEST FLOWPATH FROM NODE    240.00 TO NODE    236.00 =    400.00 FEET.

****************************************************************************
 FLOW PROCESS FROM NODE    236.00 TO NODE    234.00 IS CODE =  31
----------------------------------------------------------------------------
 >>>>>COMPUTE PIPE-FLOW TRAVEL TIME THRU SUBAREA<<<<<
 >>>>>USING COMPUTER-ESTIMATED PIPESIZE (NON-PRESSURE FLOW)<<<<<
============================================================================
 ELEVATION DATA: UPSTREAM(FEET) =   360.20  DOWNSTREAM(FEET) =   354.90
 FLOW LENGTH(FEET) =    30.00   MANNING'S N =  0.013
 DEPTH OF FLOW IN  12.0 INCH PIPE IS   8.5 INCHES
 PIPE-FLOW VELOCITY(FEET/SEC.) =  20.28
 ESTIMATED PIPE DIAMETER(INCH) =  12.00    NUMBER OF PIPES =   1
 PIPE-FLOW(CFS) =     12.01
 PIPE TRAVEL TIME(MIN.) =   0.02    Tc(MIN.) =    3.51
 LONGEST FLOWPATH FROM NODE    240.00 TO NODE    234.00 =    430.00 FEET.

****************************************************************************
 FLOW PROCESS FROM NODE    234.00 TO NODE    234.00 IS CODE =   1
----------------------------------------------------------------------------
 >>>>>DESIGNATE INDEPENDENT STREAM FOR CONFLUENCE<<<<<
 >>>>>AND COMPUTE VARIOUS CONFLUENCED STREAM VALUES<<<<<
============================================================================
 TOTAL NUMBER OF STREAMS =  2
 CONFLUENCE VALUES USED FOR INDEPENDENT STREAM  2 ARE:
 TIME OF CONCENTRATION(MIN.) =    3.51
 RAINFALL INTENSITY(INCH/HR) =   8.43
 TOTAL STREAM AREA(ACRES) =     1.50
 PEAK FLOW RATE(CFS) AT CONFLUENCE =     12.01

 ** CONFLUENCE DATA **
 STREAM     RUNOFF      Tc     INTENSITY     AREA
 NUMBER      (CFS)    (MIN.)   (INCH/HOUR)    (ACRE)
   1       16.58    4.69       8.431         2.07
   2       12.01    3.51       8.431         1.50

 RAINFALL INTENSITY AND TIME OF CONCENTRATION RATIO
 CONFLUENCE FORMULA USED FOR  2 STREAMS.
```

```
 ** PEAK FLOW RATE TABLE **
 STREAM     RUNOFF     Tc     INTENSITY
 NUMBER      (CFS)    (MIN.)   (INCH/HOUR)
    1       28.59    3.51       8.431
    2       28.59    4.69       8.431

 COMPUTED CONFLUENCE ESTIMATES ARE AS FOLLOWS:
 PEAK FLOW RATE(CFS) =      28.59   Tc(MIN.) =    4.69
 TOTAL AREA(ACRES) =       3.6
 LONGEST FLOWPATH FROM NODE    246.00 TO NODE    234.00 =     680.00 FEET.

****************************************************************************
 FLOW PROCESS FROM NODE    234.00 TO NODE    226.00 IS CODE =  31
----------------------------------------------------------------------------
 >>>>>COMPUTE PIPE-FLOW TRAVEL TIME THRU SUBAREA<<<<<
 >>>>>USING COMPUTER-ESTIMATED PIPESIZE (NON-PRESSURE FLOW)<<<<<
============================================================================
 ELEVATION DATA: UPSTREAM(FEET) =   354.90  DOWNSTREAM(FEET) =   353.80
 FLOW LENGTH(FEET) =   125.00   MANNING'S N =  0.013
 DEPTH OF FLOW IN  30.0 INCH PIPE IS  20.0 INCHES
 PIPE-FLOW VELOCITY(FEET/SEC.) =   8.23
 ESTIMATED PIPE DIAMETER(INCH) =  30.00    NUMBER OF PIPES =   1
 PIPE-FLOW(CFS) =      28.59
 PIPE TRAVEL TIME(MIN.) =   0.25    Tc(MIN.) =    4.94
 LONGEST FLOWPATH FROM NODE    246.00 TO NODE    226.00 =     805.00 FEET.

****************************************************************************
 FLOW PROCESS FROM NODE    226.00 TO NODE    226.00 IS CODE =   1
----------------------------------------------------------------------------
 >>>>>DESIGNATE INDEPENDENT STREAM FOR CONFLUENCE<<<<<
============================================================================
 TOTAL NUMBER OF STREAMS =  2
 CONFLUENCE VALUES USED FOR INDEPENDENT STREAM  1 ARE:
 TIME OF CONCENTRATION(MIN.) =    4.94
 RAINFALL INTENSITY(INCH/HR) =   8.43
 TOTAL STREAM AREA(ACRES) =     3.57
 PEAK FLOW RATE(CFS) AT CONFLUENCE =     28.59

****************************************************************************
 FLOW PROCESS FROM NODE    232.00 TO NODE    230.00 IS CODE =  21
----------------------------------------------------------------------------
 >>>>>RATIONAL METHOD INITIAL SUBAREA ANALYSIS<<<<<
============================================================================
 *USER SPECIFIED(SUBAREA):
 USER-SPECIFIED RUNOFF COEFFICIENT = .9500
 S.C.S. CURVE NUMBER (AMC II) =   0
 INITIAL SUBAREA FLOW-LENGTH(FEET) =    65.00
 UPSTREAM ELEVATION(FEET) =    374.50
```

```
 DOWNSTREAM ELEVATION(FEET) =    373.50
 ELEVATION DIFFERENCE(FEET) =      1.00
 SUBAREA OVERLAND TIME OF FLOW(MIN.) =    1.886
  100 YEAR RAINFALL INTENSITY(INCH/HOUR) =  8.431
 NOTE: RAINFALL INTENSITY IS BASED ON Tc = 5-MINUTE.
 SUBAREA RUNOFF(CFS) =      0.40
 TOTAL AREA(ACRES) =      0.05   TOTAL RUNOFF(CFS) =      0.40

****************************************************************************
 FLOW PROCESS FROM NODE    230.00 TO NODE    228.00 IS CODE =  62
----------------------------------------------------------------------------
 >>>>>COMPUTE STREET FLOW TRAVEL TIME THRU SUBAREA<<<<<
 >>>>>(STREET TABLE SECTION #  1 USED)<<<<<
============================================================================
 UPSTREAM ELEVATION(FEET) =  373.50  DOWNSTREAM ELEVATION(FEET) =  363.30
 STREET LENGTH(FEET) =   385.00   CURB HEIGHT(INCHES) =  6.0
 STREET HALFWIDTH(FEET) = 20.00

 DISTANCE FROM CROWN TO CROSSFALL GRADEBREAK(FEET) =  12.00
 INSIDE STREET CROSSFALL(DECIMAL) =  0.020
 OUTSIDE STREET CROSSFALL(DECIMAL)  =  0.020

 SPECIFIED NUMBER OF HALFSTREETS CARRYING RUNOFF =  2
 STREET PARKWAY CROSSFALL(DECIMAL)  =  0.020
 Manning's FRICTION FACTOR for Streetflow Section(curb-to-curb) =   0.0150
 Manning's FRICTION FACTOR for Back-of-Walk Flow Section =   0.0200

  **TRAVEL TIME COMPUTED USING ESTIMATED FLOW(CFS) =       7.77
  STREETFLOW MODEL RESULTS USING ESTIMATED FLOW:
  STREET FLOW DEPTH(FEET) =  0.32
  HALFSTREET FLOOD WIDTH(FEET) =    9.83
  AVERAGE FLOW VELOCITY(FEET/SEC.) =    3.58
  PRODUCT OF DEPTH&VELOCITY(FT*FT/SEC.) =    1.16
 STREET FLOW TRAVEL TIME(MIN.) =   1.79   Tc(MIN.) =    3.68
  100 YEAR RAINFALL INTENSITY(INCH/HOUR) =  8.431
 NOTE: RAINFALL INTENSITY IS BASED ON Tc = 5-MINUTE.
 *USER SPECIFIED(SUBAREA):
 USER-SPECIFIED RUNOFF COEFFICIENT = .9500
 S.C.S. CURVE NUMBER (AMC II) =   0
 AREA-AVERAGE RUNOFF COEFFICIENT =  0.950
 SUBAREA AREA(ACRES) =    1.84     SUBAREA RUNOFF(CFS) =   14.74
 TOTAL AREA(ACRES) =       1.9       PEAK FLOW RATE(CFS) =     15.14

 END OF SUBAREA STREET FLOW HYDRAULICS:
 DEPTH(FEET) = 0.38   HALFSTREET FLOOD WIDTH(FEET) =  12.92
 FLOW VELOCITY(FEET/SEC.) =  4.23   DEPTH*VELOCITY(FT*FT/SEC.) =   1.63
 LONGEST FLOWPATH FROM NODE    232.00 TO NODE    228.00 =     450.00 FEET.
```

```
****************************************************************************
 FLOW PROCESS FROM NODE    228.00 TO NODE    226.00 IS CODE =  31
----------------------------------------------------------------------------
 >>>>>COMPUTE PIPE-FLOW TRAVEL TIME THRU SUBAREA<<<<<
 >>>>>USING COMPUTER-ESTIMATED PIPESIZE (NON-PRESSURE FLOW)<<<<<
============================================================================
 ELEVATION DATA: UPSTREAM(FEET) =   359.40  DOWNSTREAM(FEET) =   353.80
 FLOW LENGTH(FEET) =    40.00   MANNING'S N =  0.013
 DEPTH OF FLOW IN  15.0 INCH PIPE IS   8.9 INCHES
 PIPE-FLOW VELOCITY(FEET/SEC.) =  19.96
 ESTIMATED PIPE DIAMETER(INCH) =  15.00    NUMBER OF PIPES =   1
 PIPE-FLOW(CFS) =     15.14
 PIPE TRAVEL TIME(MIN.) =   0.03    Tc(MIN.) =    3.71
 LONGEST FLOWPATH FROM NODE    232.00 TO NODE    226.00 =     490.00 FEET.

****************************************************************************
 FLOW PROCESS FROM NODE    226.00 TO NODE    226.00 IS CODE =   1
----------------------------------------------------------------------------
 >>>>>DESIGNATE INDEPENDENT STREAM FOR CONFLUENCE<<<<<
 >>>>>AND COMPUTE VARIOUS CONFLUENCED STREAM VALUES<<<<<
============================================================================
 TOTAL NUMBER OF STREAMS =  2
 CONFLUENCE VALUES USED FOR INDEPENDENT STREAM  2 ARE:
 TIME OF CONCENTRATION(MIN.) =    3.71
 RAINFALL INTENSITY(INCH/HR) =   8.43
 TOTAL STREAM AREA(ACRES) =     1.89
 PEAK FLOW RATE(CFS) AT CONFLUENCE =     15.14

 ** CONFLUENCE DATA **
 STREAM     RUNOFF      Tc     INTENSITY     AREA
 NUMBER      (CFS)    (MIN.)   (INCH/HOUR)    (ACRE)
   1      28.59    4.94       8.431        3.57
   2      15.14    3.71       8.431        1.89

 RAINFALL INTENSITY AND TIME OF CONCENTRATION RATIO
 CONFLUENCE FORMULA USED FOR  2 STREAMS.

 ** PEAK FLOW RATE TABLE **
 STREAM     RUNOFF      Tc     INTENSITY
 NUMBER      (CFS)    (MIN.)   (INCH/HOUR)
   1      43.73    3.71       8.431
   2      43.73    4.94       8.431

 COMPUTED CONFLUENCE ESTIMATES ARE AS FOLLOWS:
 PEAK FLOW RATE(CFS) =     43.73   Tc(MIN.) =    4.94
 TOTAL AREA(ACRES) =       5.5
 LONGEST FLOWPATH FROM NODE    246.00 TO NODE    226.00 =     805.00 FEET.
```

```
****************************************************************************
 FLOW PROCESS FROM NODE    226.00 TO NODE    222.00 IS CODE =  31
----------------------------------------------------------------------------
 >>>>>COMPUTE PIPE-FLOW TRAVEL TIME THRU SUBAREA<<<<<
 >>>>>USING COMPUTER-ESTIMATED PIPESIZE (NON-PRESSURE FLOW)<<<<<
============================================================================
 ELEVATION DATA: UPSTREAM(FEET) =   353.80  DOWNSTREAM(FEET) =   353.30
 FLOW LENGTH(FEET) =    50.00   MANNING'S N =  0.013
 DEPTH OF FLOW IN  33.0 INCH PIPE IS  23.8 INCHES
 PIPE-FLOW VELOCITY(FEET/SEC.) =   9.52
 ESTIMATED PIPE DIAMETER(INCH) =  33.00    NUMBER OF PIPES =   1
 PIPE-FLOW(CFS) =     43.73
 PIPE TRAVEL TIME(MIN.) =   0.09    Tc(MIN.) =    5.03
 LONGEST FLOWPATH FROM NODE    246.00 TO NODE    222.00 =     855.00 FEET.

****************************************************************************
 FLOW PROCESS FROM NODE    222.00 TO NODE    222.00 IS CODE =   1
----------------------------------------------------------------------------
 >>>>>DESIGNATE INDEPENDENT STREAM FOR CONFLUENCE<<<<<
============================================================================
 TOTAL NUMBER OF STREAMS =  2
 CONFLUENCE VALUES USED FOR INDEPENDENT STREAM  1 ARE:
 TIME OF CONCENTRATION(MIN.) =    5.03
 RAINFALL INTENSITY(INCH/HR) =   8.40
 TOTAL STREAM AREA(ACRES) =     5.46
 PEAK FLOW RATE(CFS) AT CONFLUENCE =     43.73

****************************************************************************
 FLOW PROCESS FROM NODE    299.00 TO NODE    298.00 IS CODE =  21
----------------------------------------------------------------------------
 >>>>>RATIONAL METHOD INITIAL SUBAREA ANALYSIS<<<<<
============================================================================
 *USER SPECIFIED(SUBAREA):
 USER-SPECIFIED RUNOFF COEFFICIENT = .9500
 S.C.S. CURVE NUMBER (AMC II) =   0
 INITIAL SUBAREA FLOW-LENGTH(FEET) =    40.00
 UPSTREAM ELEVATION(FEET) =    415.20
 DOWNSTREAM ELEVATION(FEET) =    413.70
 ELEVATION DIFFERENCE(FEET) =      1.50
 SUBAREA OVERLAND TIME OF FLOW(MIN.) =    1.099
  100 YEAR RAINFALL INTENSITY(INCH/HOUR) =  8.431
 NOTE: RAINFALL INTENSITY IS BASED ON Tc = 5-MINUTE.
 SUBAREA RUNOFF(CFS) =      0.40
 TOTAL AREA(ACRES) =      0.05   TOTAL RUNOFF(CFS) =      0.40

****************************************************************************
 FLOW PROCESS FROM NODE    298.00 TO NODE    224.00 IS CODE =  62
----------------------------------------------------------------------------
```

```
 >>>>>COMPUTE STREET FLOW TRAVEL TIME THRU SUBAREA<<<<<
 >>>>>(STREET TABLE SECTION #  1 USED)<<<<<
================================================================================
 UPSTREAM ELEVATION(FEET) =  413.70  DOWNSTREAM ELEVATION(FEET) =  374.00
 STREET LENGTH(FEET) =   950.00   CURB HEIGHT(INCHES) =  6.0
 STREET HALFWIDTH(FEET) = 20.00

 DISTANCE FROM CROWN TO CROSSFALL GRADEBREAK(FEET) =  12.00
 INSIDE STREET CROSSFALL(DECIMAL) =  0.020
 OUTSIDE STREET CROSSFALL(DECIMAL)  =  0.020

 SPECIFIED NUMBER OF HALFSTREETS CARRYING RUNOFF =  1
 STREET PARKWAY CROSSFALL(DECIMAL)  =  0.020
 Manning's FRICTION FACTOR for Streetflow Section(curb-to-curb) =   0.0150
 Manning's FRICTION FACTOR for Back-of-Walk Flow Section =   0.0200

  **TRAVEL TIME COMPUTED USING ESTIMATED FLOW(CFS) =       9.97
  STREETFLOW MODEL RESULTS USING ESTIMATED FLOW:
  STREET FLOW DEPTH(FEET) =  0.39
  HALFSTREET FLOOD WIDTH(FEET) =   13.20
  AVERAGE FLOW VELOCITY(FEET/SEC.) =    5.36
  PRODUCT OF DEPTH&VELOCITY(FT*FT/SEC.) =    2.09
 STREET FLOW TRAVEL TIME(MIN.) =   2.96   Tc(MIN.) =    4.05
  100 YEAR RAINFALL INTENSITY(INCH/HOUR) =  8.431
 NOTE: RAINFALL INTENSITY IS BASED ON Tc = 5-MINUTE.
 *USER SPECIFIED(SUBAREA):
 USER-SPECIFIED RUNOFF COEFFICIENT = .9500
 S.C.S. CURVE NUMBER (AMC II) =   0
 AREA-AVERAGE RUNOFF COEFFICIENT =  0.950
 SUBAREA AREA(ACRES) =    2.39     SUBAREA RUNOFF(CFS) =   19.14
 TOTAL AREA(ACRES) =       2.4       PEAK FLOW RATE(CFS) =     19.54

 END OF SUBAREA STREET FLOW HYDRAULICS:
 DEPTH(FEET) = 0.47   HALFSTREET FLOOD WIDTH(FEET) =  17.23
 FLOW VELOCITY(FEET/SEC.) =  6.33   DEPTH*VELOCITY(FT*FT/SEC.) =   2.98
 LONGEST FLOWPATH FROM NODE    299.00 TO NODE    224.00 =     990.00 FEET.

****************************************************************************
 FLOW PROCESS FROM NODE    224.00 TO NODE    222.00 IS CODE =  31
----------------------------------------------------------------------------
 >>>>>COMPUTE PIPE-FLOW TRAVEL TIME THRU SUBAREA<<<<<
 >>>>>USING COMPUTER-ESTIMATED PIPESIZE (NON-PRESSURE FLOW)<<<<<
================================================================================
 ELEVATION DATA: UPSTREAM(FEET) =   354.70  DOWNSTREAM(FEET) =   353.30
 FLOW LENGTH(FEET) =   110.00   MANNING'S N =  0.013
 DEPTH OF FLOW IN  24.0 INCH PIPE IS  16.3 INCHES
 PIPE-FLOW VELOCITY(FEET/SEC.) =   8.57
 ESTIMATED PIPE DIAMETER(INCH) =  24.00    NUMBER OF PIPES =   1
```

```
 PIPE-FLOW(CFS) =     19.54
 PIPE TRAVEL TIME(MIN.) =   0.21   Tc(MIN.) =   4.27
 LONGEST FLOWPATH FROM NODE   299.00 TO NODE   222.00 =   1100.00 FEET.

****************************************************************************
 FLOW PROCESS FROM NODE   222.00 TO NODE   222.00 IS CODE =   1
----------------------------------------------------------------------------
 >>>>>DESIGNATE INDEPENDENT STREAM FOR CONFLUENCE<<<<<
 >>>>>AND COMPUTE VARIOUS CONFLUENCED STREAM VALUES<<<<<
============================================================================
 TOTAL NUMBER OF STREAMS =  2
 CONFLUENCE VALUES USED FOR INDEPENDENT STREAM  2 ARE:
 TIME OF CONCENTRATION(MIN.) =   4.27
 RAINFALL INTENSITY(INCH/HR) =   8.43
 TOTAL STREAM AREA(ACRES) =     2.44
 PEAK FLOW RATE(CFS) AT CONFLUENCE =     19.54

 ** CONFLUENCE DATA **
 STREAM     RUNOFF      Tc     INTENSITY     AREA
 NUMBER      (CFS)    (MIN.)   (INCH/HOUR)    (ACRE)
   1      43.73    5.03       8.399        5.46
   2      19.54    4.27       8.431        2.44

 RAINFALL INTENSITY AND TIME OF CONCENTRATION RATIO
 CONFLUENCE FORMULA USED FOR  2 STREAMS.

 ** PEAK FLOW RATE TABLE **
 STREAM     RUNOFF     Tc     INTENSITY
 NUMBER      (CFS)    (MIN.)   (INCH/HOUR)
   1      63.11    4.27       8.431
   2      63.20    5.03       8.399

 COMPUTED CONFLUENCE ESTIMATES ARE AS FOLLOWS:
 PEAK FLOW RATE(CFS) =      63.20   Tc(MIN.) =    5.03
 TOTAL AREA(ACRES) =       7.9
 LONGEST FLOWPATH FROM NODE   299.00 TO NODE   222.00 =   1100.00 FEET.

****************************************************************************
 FLOW PROCESS FROM NODE   222.00 TO NODE   214.00 IS CODE =  31
----------------------------------------------------------------------------
 >>>>>COMPUTE PIPE-FLOW TRAVEL TIME THRU SUBAREA<<<<<
 >>>>>USING COMPUTER-ESTIMATED PIPESIZE (NON-PRESSURE FLOW)<<<<<
============================================================================
 ELEVATION DATA: UPSTREAM(FEET) =   353.30  DOWNSTREAM(FEET) =   352.50
 FLOW LENGTH(FEET) =   115.00   MANNING'S N =  0.013
 DEPTH OF FLOW IN  39.0 INCH PIPE IS  30.9 INCHES
 PIPE-FLOW VELOCITY(FEET/SEC.) =   8.97
 ESTIMATED PIPE DIAMETER(INCH) =  39.00    NUMBER OF PIPES =   1
```

```
 PIPE-FLOW(CFS) =     63.20
 PIPE TRAVEL TIME(MIN.) =  0.21   Tc(MIN.) =   5.24
 LONGEST FLOWPATH FROM NODE   299.00 TO NODE   214.00 =   1215.00 FEET.

****************************************************************************
 FLOW PROCESS FROM NODE   214.00 TO NODE   214.00 IS CODE =  1
----------------------------------------------------------------------------
 >>>>>DESIGNATE INDEPENDENT STREAM FOR CONFLUENCE<<<<<
============================================================================
 TOTAL NUMBER OF STREAMS =  2
 CONFLUENCE VALUES USED FOR INDEPENDENT STREAM  1 ARE:
 TIME OF CONCENTRATION(MIN.) =   5.24
 RAINFALL INTENSITY(INCH/HR) =  8.18
 TOTAL STREAM AREA(ACRES) =     7.90
 PEAK FLOW RATE(CFS) AT CONFLUENCE =     63.20

****************************************************************************
 FLOW PROCESS FROM NODE   220.00 TO NODE   218.00 IS CODE =  21
----------------------------------------------------------------------------
 >>>>>RATIONAL METHOD INITIAL SUBAREA ANALYSIS<<<<<
============================================================================
 *USER SPECIFIED(SUBAREA):
 USER-SPECIFIED RUNOFF COEFFICIENT = .9500
 S.C.S. CURVE NUMBER (AMC II) =  0
 INITIAL SUBAREA FLOW-LENGTH(FEET) =   50.00
 UPSTREAM ELEVATION(FEET) =   374.80
 DOWNSTREAM ELEVATION(FEET) =   374.00
 ELEVATION DIFFERENCE(FEET) =     0.80
 SUBAREA OVERLAND TIME OF FLOW(MIN.) =   1.632
  100 YEAR RAINFALL INTENSITY(INCH/HOUR) =  8.431
 NOTE: RAINFALL INTENSITY IS BASED ON Tc = 5-MINUTE.
 SUBAREA RUNOFF(CFS) =     0.32
 TOTAL AREA(ACRES) =     0.04   TOTAL RUNOFF(CFS) =     0.32

****************************************************************************
 FLOW PROCESS FROM NODE   218.00 TO NODE   216.00 IS CODE =  62
----------------------------------------------------------------------------
 >>>>>COMPUTE STREET FLOW TRAVEL TIME THRU SUBAREA<<<<<
 >>>>>(STREET TABLE SECTION #  1 USED)<<<<<
============================================================================
 UPSTREAM ELEVATION(FEET) =  374.00  DOWNSTREAM ELEVATION(FEET) =  362.50
 STREET LENGTH(FEET) =   450.00   CURB HEIGHT(INCHES) =  6.0
 STREET HALFWIDTH(FEET) = 20.00

 DISTANCE FROM CROWN TO CROSSFALL GRADEBREAK(FEET) =  12.00
 INSIDE STREET CROSSFALL(DECIMAL) =  0.020
 OUTSIDE STREET CROSSFALL(DECIMAL)  =  0.020
```

```
 SPECIFIED NUMBER OF HALFSTREETS CARRYING RUNOFF =  2
 STREET PARKWAY CROSSFALL(DECIMAL)  =  0.020
 Manning's FRICTION FACTOR for Streetflow Section(curb-to-curb) =   0.0150
 Manning's FRICTION FACTOR for Back-of-Walk Flow Section =   0.0200

  **TRAVEL TIME COMPUTED USING ESTIMATED FLOW(CFS) =       5.81
  STREETFLOW MODEL RESULTS USING ESTIMATED FLOW:
  STREET FLOW DEPTH(FEET) =  0.30
  HALFSTREET FLOOD WIDTH(FEET) =    8.70
  AVERAGE FLOW VELOCITY(FEET/SEC.) =    3.32
  PRODUCT OF DEPTH&VELOCITY(FT*FT/SEC.) =    1.00
 STREET FLOW TRAVEL TIME(MIN.) =   2.26   Tc(MIN.) =    3.89
  100 YEAR RAINFALL INTENSITY(INCH/HOUR) =  8.431
 NOTE: RAINFALL INTENSITY IS BASED ON Tc = 5-MINUTE.
 *USER SPECIFIED(SUBAREA):
 USER-SPECIFIED RUNOFF COEFFICIENT = .9500
 S.C.S. CURVE NUMBER (AMC II) =   0
 AREA-AVERAGE RUNOFF COEFFICIENT =  0.950
 SUBAREA AREA(ACRES) =    1.37     SUBAREA RUNOFF(CFS) =   10.97
 TOTAL AREA(ACRES) =       1.4       PEAK FLOW RATE(CFS) =     11.29

 END OF SUBAREA STREET FLOW HYDRAULICS:
 DEPTH(FEET) = 0.36   HALFSTREET FLOOD WIDTH(FEET) =  11.52
 FLOW VELOCITY(FEET/SEC.) =  3.91   DEPTH*VELOCITY(FT*FT/SEC.) =   1.39
 LONGEST FLOWPATH FROM NODE    220.00 TO NODE    216.00 =     500.00 FEET.

****************************************************************************
 FLOW PROCESS FROM NODE    216.00 TO NODE    214.00 IS CODE =  31
----------------------------------------------------------------------------
 >>>>>COMPUTE PIPE-FLOW TRAVEL TIME THRU SUBAREA<<<<<
 >>>>>USING COMPUTER-ESTIMATED PIPESIZE (NON-PRESSURE FLOW)<<<<<
============================================================================
 ELEVATION DATA: UPSTREAM(FEET) =   358.30  DOWNSTREAM(FEET) =   352.50
 FLOW LENGTH(FEET) =    45.00   MANNING'S N =  0.013
 DEPTH OF FLOW IN  12.0 INCH PIPE IS   9.2 INCHES
 PIPE-FLOW VELOCITY(FEET/SEC.) =  17.55
 ESTIMATED PIPE DIAMETER(INCH) =  12.00    NUMBER OF PIPES =   1
 PIPE-FLOW(CFS) =      11.29
 PIPE TRAVEL TIME(MIN.) =   0.04    Tc(MIN.) =    3.94
 LONGEST FLOWPATH FROM NODE    220.00 TO NODE    214.00 =     545.00 FEET.

****************************************************************************
 FLOW PROCESS FROM NODE    214.00 TO NODE    214.00 IS CODE =   1
----------------------------------------------------------------------------
 >>>>>DESIGNATE INDEPENDENT STREAM FOR CONFLUENCE<<<<<
 >>>>>AND COMPUTE VARIOUS CONFLUENCED STREAM VALUES<<<<<
============================================================================
 TOTAL NUMBER OF STREAMS =  2
```

```
 CONFLUENCE VALUES USED FOR INDEPENDENT STREAM  2 ARE:
 TIME OF CONCENTRATION(MIN.) =    3.94
 RAINFALL INTENSITY(INCH/HR) =   8.43
 TOTAL STREAM AREA(ACRES) =     1.41
 PEAK FLOW RATE(CFS) AT CONFLUENCE =     11.29

 ** CONFLUENCE DATA **
 STREAM     RUNOFF      Tc     INTENSITY     AREA
 NUMBER      (CFS)    (MIN.)   (INCH/HOUR)    (ACRE)
   1      63.20    5.24       8.177         7.90
   2      11.29    3.94       8.431         1.41

 RAINFALL INTENSITY AND TIME OF CONCENTRATION RATIO
 CONFLUENCE FORMULA USED FOR  2 STREAMS.

 ** PEAK FLOW RATE TABLE **
 STREAM     RUNOFF      Tc     INTENSITY
 NUMBER      (CFS)    (MIN.)   (INCH/HOUR)
   1      72.59    3.94       8.431
   2      74.15    5.24       8.177

 COMPUTED CONFLUENCE ESTIMATES ARE AS FOLLOWS:
 PEAK FLOW RATE(CFS) =      74.15   Tc(MIN.) =    5.24
 TOTAL AREA(ACRES) =       9.3
 LONGEST FLOWPATH FROM NODE    299.00 TO NODE    214.00 =    1215.00 FEET.

****************************************************************************
 FLOW PROCESS FROM NODE    214.00 TO NODE    200.00 IS CODE =  31
----------------------------------------------------------------------------
 >>>>>COMPUTE PIPE-FLOW TRAVEL TIME THRU SUBAREA<<<<<
 >>>>>USING COMPUTER-ESTIMATED PIPESIZE (NON-PRESSURE FLOW)<<<<<
============================================================================
 ELEVATION DATA: UPSTREAM(FEET) =   352.50  DOWNSTREAM(FEET) =   350.90
 FLOW LENGTH(FEET) =   155.00   MANNING'S N =  0.013
 DEPTH OF FLOW IN  39.0 INCH PIPE IS  29.8 INCHES
 PIPE-FLOW VELOCITY(FEET/SEC.) =  10.90
 ESTIMATED PIPE DIAMETER(INCH) =  39.00    NUMBER OF PIPES =   1
 PIPE-FLOW(CFS) =      74.15
 PIPE TRAVEL TIME(MIN.) =   0.24    Tc(MIN.) =    5.48
 LONGEST FLOWPATH FROM NODE    299.00 TO NODE    200.00 =    1370.00 FEET.

****************************************************************************
 FLOW PROCESS FROM NODE    200.00 TO NODE    200.00 IS CODE =  10
----------------------------------------------------------------------------
 >>>>>MAIN-STREAM MEMORY COPIED ONTO MEMORY BANK # 2 <<<<<
============================================================================

****************************************************************************
```

```
 FLOW PROCESS FROM NODE    212.00 TO NODE    210.00 IS CODE =  21
----------------------------------------------------------------------------
 >>>>>RATIONAL METHOD INITIAL SUBAREA ANALYSIS<<<<<
============================================================================
 *USER SPECIFIED(SUBAREA):
 USER-SPECIFIED RUNOFF COEFFICIENT = .9500
 S.C.S. CURVE NUMBER (AMC II) =   0
 INITIAL SUBAREA FLOW-LENGTH(FEET) =    80.00
 UPSTREAM ELEVATION(FEET) =    372.80
 DOWNSTREAM ELEVATION(FEET) =    370.30
 ELEVATION DIFFERENCE(FEET) =      2.50
 SUBAREA OVERLAND TIME OF FLOW(MIN.) =    1.652
  100 YEAR RAINFALL INTENSITY(INCH/HOUR) =  8.431
 NOTE: RAINFALL INTENSITY IS BASED ON Tc = 5-MINUTE.
 SUBAREA RUNOFF(CFS) =      0.32
 TOTAL AREA(ACRES) =      0.04   TOTAL RUNOFF(CFS) =      0.32

****************************************************************************
 FLOW PROCESS FROM NODE    210.00 TO NODE    202.00 IS CODE =  62
----------------------------------------------------------------------------
 >>>>>COMPUTE STREET FLOW TRAVEL TIME THRU SUBAREA<<<<<
 >>>>>(STREET TABLE SECTION #  1 USED)<<<<<
============================================================================
 UPSTREAM ELEVATION(FEET) =  370.30  DOWNSTREAM ELEVATION(FEET) =  360.50
 STREET LENGTH(FEET) =   385.00   CURB HEIGHT(INCHES) =  6.0
 STREET HALFWIDTH(FEET) = 20.00

 DISTANCE FROM CROWN TO CROSSFALL GRADEBREAK(FEET) =  12.00
 INSIDE STREET CROSSFALL(DECIMAL) =  0.020
 OUTSIDE STREET CROSSFALL(DECIMAL)  =  0.020

 SPECIFIED NUMBER OF HALFSTREETS CARRYING RUNOFF =  2
 STREET PARKWAY CROSSFALL(DECIMAL)  =  0.020
 Manning's FRICTION FACTOR for Streetflow Section(curb-to-curb) =   0.0150
 Manning's FRICTION FACTOR for Back-of-Walk Flow Section =   0.0200

  **TRAVEL TIME COMPUTED USING ESTIMATED FLOW(CFS) =       3.48
  STREETFLOW MODEL RESULTS USING ESTIMATED FLOW:
  STREET FLOW DEPTH(FEET) =  0.26
  HALFSTREET FLOOD WIDTH(FEET) =    6.81
  AVERAGE FLOW VELOCITY(FEET/SEC.) =    3.00
  PRODUCT OF DEPTH&VELOCITY(FT*FT/SEC.) =    0.79
 STREET FLOW TRAVEL TIME(MIN.) =   2.14   Tc(MIN.) =    3.79
  100 YEAR RAINFALL INTENSITY(INCH/HOUR) =  8.431
 NOTE: RAINFALL INTENSITY IS BASED ON Tc = 5-MINUTE.
 *USER SPECIFIED(SUBAREA):
 USER-SPECIFIED RUNOFF COEFFICIENT = .9500
 S.C.S. CURVE NUMBER (AMC II) =   0
```

```
 AREA-AVERAGE RUNOFF COEFFICIENT =  0.950
 SUBAREA AREA(ACRES) =    0.79     SUBAREA RUNOFF(CFS) =    6.33
 TOTAL AREA(ACRES) =       0.8       PEAK FLOW RATE(CFS) =      6.65

 END OF SUBAREA STREET FLOW HYDRAULICS:
 DEPTH(FEET) = 0.31   HALFSTREET FLOOD WIDTH(FEET) =   9.27
 FLOW VELOCITY(FEET/SEC.) =  3.40   DEPTH*VELOCITY(FT*FT/SEC.) =   1.06
 LONGEST FLOWPATH FROM NODE    212.00 TO NODE    202.00 =     465.00 FEET.

****************************************************************************
 FLOW PROCESS FROM NODE    202.00 TO NODE    202.00 IS CODE =   1
----------------------------------------------------------------------------
 >>>>>DESIGNATE INDEPENDENT STREAM FOR CONFLUENCE<<<<<
============================================================================
 TOTAL NUMBER OF STREAMS =  2
 CONFLUENCE VALUES USED FOR INDEPENDENT STREAM  1 ARE:
 TIME OF CONCENTRATION(MIN.) =    3.79
 RAINFALL INTENSITY(INCH/HR) =   8.43
 TOTAL STREAM AREA(ACRES) =     0.83
 PEAK FLOW RATE(CFS) AT CONFLUENCE =      6.65

****************************************************************************
 FLOW PROCESS FROM NODE    208.00 TO NODE    206.00 IS CODE =  21
----------------------------------------------------------------------------
 >>>>>RATIONAL METHOD INITIAL SUBAREA ANALYSIS<<<<<
============================================================================
 *USER SPECIFIED(SUBAREA):
 USER-SPECIFIED RUNOFF COEFFICIENT = .9500
 S.C.S. CURVE NUMBER (AMC II) =   0
 INITIAL SUBAREA FLOW-LENGTH(FEET) =    80.00
 UPSTREAM ELEVATION(FEET) =    368.00
 DOWNSTREAM ELEVATION(FEET) =    365.70
 ELEVATION DIFFERENCE(FEET) =      2.30
 SUBAREA OVERLAND TIME OF FLOW(MIN.) =    1.698
  100 YEAR RAINFALL INTENSITY(INCH/HOUR) =  8.431
 NOTE: RAINFALL INTENSITY IS BASED ON Tc = 5-MINUTE.
 SUBAREA RUNOFF(CFS) =      0.56
 TOTAL AREA(ACRES) =      0.07   TOTAL RUNOFF(CFS) =      0.56

****************************************************************************
 FLOW PROCESS FROM NODE    206.00 TO NODE    204.00 IS CODE =  62
----------------------------------------------------------------------------
 >>>>>COMPUTE STREET FLOW TRAVEL TIME THRU SUBAREA<<<<<
 >>>>>(STREET TABLE SECTION #  1 USED)<<<<<
============================================================================
 UPSTREAM ELEVATION(FEET) =  365.70  DOWNSTREAM ELEVATION(FEET) =  360.40
 STREET LENGTH(FEET) =   470.00   CURB HEIGHT(INCHES) =  6.0
 STREET HALFWIDTH(FEET) = 20.00
```

```
 DISTANCE FROM CROWN TO CROSSFALL GRADEBREAK(FEET) =  12.00
 INSIDE STREET CROSSFALL(DECIMAL) =  0.020
 OUTSIDE STREET CROSSFALL(DECIMAL)  =  0.020

 SPECIFIED NUMBER OF HALFSTREETS CARRYING RUNOFF =  1
 STREET PARKWAY CROSSFALL(DECIMAL)  =  0.020
 Manning's FRICTION FACTOR for Streetflow Section(curb-to-curb) =   0.0150
 Manning's FRICTION FACTOR for Back-of-Walk Flow Section =   0.0200

  **TRAVEL TIME COMPUTED USING ESTIMATED FLOW(CFS) =       3.64
  STREETFLOW MODEL RESULTS USING ESTIMATED FLOW:
  STREET FLOW DEPTH(FEET) =  0.35
  HALFSTREET FLOOD WIDTH(FEET) =   11.42
  AVERAGE FLOW VELOCITY(FEET/SEC.) =    2.56
  PRODUCT OF DEPTH&VELOCITY(FT*FT/SEC.) =    0.91
 STREET FLOW TRAVEL TIME(MIN.) =   3.06   Tc(MIN.) =    4.76
  100 YEAR RAINFALL INTENSITY(INCH/HOUR) =  8.431
 NOTE: RAINFALL INTENSITY IS BASED ON Tc = 5-MINUTE.
 *USER SPECIFIED(SUBAREA):
 USER-SPECIFIED RUNOFF COEFFICIENT = .9500
 S.C.S. CURVE NUMBER (AMC II) =   0
 AREA-AVERAGE RUNOFF COEFFICIENT =  0.950
 SUBAREA AREA(ACRES) =    0.77     SUBAREA RUNOFF(CFS) =    6.17
 TOTAL AREA(ACRES) =       0.8       PEAK FLOW RATE(CFS) =       6.73

 END OF SUBAREA STREET FLOW HYDRAULICS:
 DEPTH(FEET) = 0.42   HALFSTREET FLOOD WIDTH(FEET) =  14.61
 FLOW VELOCITY(FEET/SEC.) =  2.99   DEPTH*VELOCITY(FT*FT/SEC.) =   1.25
 LONGEST FLOWPATH FROM NODE    208.00 TO NODE    204.00 =     550.00 FEET.

****************************************************************************
 FLOW PROCESS FROM NODE    204.00 TO NODE    202.00 IS CODE =  31
----------------------------------------------------------------------------
 >>>>>COMPUTE PIPE-FLOW TRAVEL TIME THRU SUBAREA<<<<<
 >>>>>USING COMPUTER-ESTIMATED PIPESIZE (NON-PRESSURE FLOW)<<<<<
============================================================================
 ELEVATION DATA: UPSTREAM(FEET) =   356.20  DOWNSTREAM(FEET) =   355.70
 FLOW LENGTH(FEET) =    30.00   MANNING'S N =  0.013
 DEPTH OF FLOW IN  15.0 INCH PIPE IS  10.6 INCHES
 PIPE-FLOW VELOCITY(FEET/SEC.) =   7.24
 ESTIMATED PIPE DIAMETER(INCH) =  15.00    NUMBER OF PIPES =   1
 PIPE-FLOW(CFS) =       6.73
 PIPE TRAVEL TIME(MIN.) =   0.07    Tc(MIN.) =    4.83
 LONGEST FLOWPATH FROM NODE    208.00 TO NODE    202.00 =     580.00 FEET.

****************************************************************************
 FLOW PROCESS FROM NODE    202.00 TO NODE    202.00 IS CODE =   1
```

```
------------------------------------------------------------------------
 >>>>>DESIGNATE INDEPENDENT STREAM FOR CONFLUENCE<<<<<
 >>>>>AND COMPUTE VARIOUS CONFLUENCED STREAM VALUES<<<<<
========================================================================
 TOTAL NUMBER OF STREAMS =  2
 CONFLUENCE VALUES USED FOR INDEPENDENT STREAM  2 ARE:
 TIME OF CONCENTRATION(MIN.) =    4.83
 RAINFALL INTENSITY(INCH/HR) =   8.43
 TOTAL STREAM AREA(ACRES) =     0.84
 PEAK FLOW RATE(CFS) AT CONFLUENCE =      6.73

 ** CONFLUENCE DATA **
 STREAM     RUNOFF      Tc     INTENSITY     AREA
 NUMBER      (CFS)    (MIN.)   (INCH/HOUR)    (ACRE)
   1        6.65     3.79       8.431         0.83
   2        6.73     4.83       8.431         0.84

 RAINFALL INTENSITY AND TIME OF CONCENTRATION RATIO
 CONFLUENCE FORMULA USED FOR  2 STREAMS.

 ** PEAK FLOW RATE TABLE **
 STREAM     RUNOFF      Tc     INTENSITY
 NUMBER      (CFS)    (MIN.)   (INCH/HOUR)
   1       11.94     3.79       8.431
   2       13.38     4.83       8.431

 COMPUTED CONFLUENCE ESTIMATES ARE AS FOLLOWS:
 PEAK FLOW RATE(CFS) =     13.38   Tc(MIN.) =    4.83
 TOTAL AREA(ACRES) =       1.7
 LONGEST FLOWPATH FROM NODE    208.00 TO NODE    202.00 =     580.00 FEET.

****************************************************************************
 FLOW PROCESS FROM NODE    202.00 TO NODE    200.00 IS CODE =  31
----------------------------------------------------------------------------
 >>>>>COMPUTE PIPE-FLOW TRAVEL TIME THRU SUBAREA<<<<<
 >>>>>USING COMPUTER-ESTIMATED PIPESIZE (NON-PRESSURE FLOW)<<<<<
============================================================================
 ELEVATION DATA: UPSTREAM(FEET) =   355.70  DOWNSTREAM(FEET) =   350.90
 FLOW LENGTH(FEET) =    30.00   MANNING'S N =  0.013
 DEPTH OF FLOW IN  12.0 INCH PIPE IS   9.7 INCHES
 PIPE-FLOW VELOCITY(FEET/SEC.) =  19.62
 ESTIMATED PIPE DIAMETER(INCH) =  12.00    NUMBER OF PIPES =   1
 PIPE-FLOW(CFS) =     13.38
 PIPE TRAVEL TIME(MIN.) =   0.03    Tc(MIN.) =    4.85
 LONGEST FLOWPATH FROM NODE    208.00 TO NODE    200.00 =     610.00 FEET.

****************************************************************************
 FLOW PROCESS FROM NODE    200.00 TO NODE    200.00 IS CODE =  11
```

```
------------------------------------------------------------------------
 >>>>>CONFLUENCE MEMORY BANK # 2 WITH THE MAIN-STREAM MEMORY<<<<<
========================================================================

 ** MAIN STREAM CONFLUENCE DATA **
 STREAM     RUNOFF      Tc      INTENSITY     AREA
 NUMBER      (CFS)    (MIN.)   (INCH/HOUR)   (ACRE)
    1       13.38     4.85       8.431        1.67
 LONGEST FLOWPATH FROM NODE    208.00 TO NODE    200.00 =     610.00 FEET.

 ** MEMORY BANK #  2 CONFLUENCE DATA **
 STREAM     RUNOFF      Tc      INTENSITY     AREA
 NUMBER      (CFS)    (MIN.)   (INCH/HOUR)   (ACRE)
    1       74.15     5.48       7.947        9.31
 LONGEST FLOWPATH FROM NODE    299.00 TO NODE    200.00 =    1370.00 FEET.

 ** PEAK FLOW RATE TABLE **
 STREAM    RUNOFF      Tc      INTENSITY
 NUMBER     (CFS)     (MIN.)   (INCH/HOUR)
    1      79.02       4.85       8.431
    2      86.76       5.48       7.947

 COMPUTED CONFLUENCE ESTIMATES ARE AS FOLLOWS:
 PEAK FLOW RATE(CFS) =     86.76   Tc(MIN.) =    5.48
 TOTAL AREA(ACRES) =      11.0

****************************************************************************
 FLOW PROCESS FROM NODE    304.00 TO NODE    302.00 IS CODE =  21
----------------------------------------------------------------------------
 >>>>>RATIONAL METHOD INITIAL SUBAREA ANALYSIS<<<<<
============================================================================
 *USER SPECIFIED(SUBAREA):
 USER-SPECIFIED RUNOFF COEFFICIENT = .9500
 S.C.S. CURVE NUMBER (AMC II) =  0
 INITIAL SUBAREA FLOW-LENGTH(FEET) =    85.00
 UPSTREAM ELEVATION(FEET) =    374.80
 DOWNSTREAM ELEVATION(FEET) =    371.30
 ELEVATION DIFFERENCE(FEET) =      3.50
 SUBAREA OVERLAND TIME OF FLOW(MIN.) =    1.553
  100 YEAR RAINFALL INTENSITY(INCH/HOUR) =  8.431
 NOTE: RAINFALL INTENSITY IS BASED ON Tc = 5-MINUTE.
 SUBAREA RUNOFF(CFS) =      0.64
 TOTAL AREA(ACRES) =      0.08   TOTAL RUNOFF(CFS) =      0.64

****************************************************************************
 FLOW PROCESS FROM NODE    302.00 TO NODE    300.00 IS CODE =  31
----------------------------------------------------------------------------
 >>>>>COMPUTE PIPE-FLOW TRAVEL TIME THRU SUBAREA<<<<<
```

```
 >>>>>USING COMPUTER-ESTIMATED PIPESIZE (NON-PRESSURE FLOW)<<<<<
================================================================================
 ELEVATION DATA: UPSTREAM(FEET) =   367.30  DOWNSTREAM(FEET) =   364.30
 FLOW LENGTH(FEET) =   805.00   MANNING'S N =  0.013
 ESTIMATED PIPE DIAMETER(INCH) INCREASED TO 12.000
 DEPTH OF FLOW IN  12.0 INCH PIPE IS   4.6 INCHES
 PIPE-FLOW VELOCITY(FEET/SEC.) =   2.31
 ESTIMATED PIPE DIAMETER(INCH) =  12.00    NUMBER OF PIPES =   1
 PIPE-FLOW(CFS) =       0.64
 PIPE TRAVEL TIME(MIN.) =   5.81    Tc(MIN.) =    7.36
 LONGEST FLOWPATH FROM NODE    304.00 TO NODE    300.00 =     890.00 FEET.

****************************************************************************
 FLOW PROCESS FROM NODE    300.00 TO NODE    300.00 IS CODE =  81
----------------------------------------------------------------------------
 >>>>>ADDITION OF SUBAREA TO MAINLINE PEAK FLOW<<<<<
================================================================================
  100 YEAR RAINFALL INTENSITY(INCH/HOUR) =  6.571
 *USER SPECIFIED(SUBAREA):
 USER-SPECIFIED RUNOFF COEFFICIENT = .9500
 S.C.S. CURVE NUMBER (AMC II) =   0
 AREA-AVERAGE RUNOFF COEFFICIENT = 0.9500
 SUBAREA AREA(ACRES) =    1.88   SUBAREA RUNOFF(CFS) =   11.74
 TOTAL AREA(ACRES) =       2.0   TOTAL RUNOFF(CFS) =      12.24
 TC(MIN.) =    7.36

****************************************************************************
 FLOW PROCESS FROM NODE    300.00 TO NODE    300.00 IS CODE =  10
----------------------------------------------------------------------------
 >>>>>MAIN-STREAM MEMORY COPIED ONTO MEMORY BANK # 3 <<<<<
================================================================================
================================================================================
 END OF STUDY SUMMARY:
 TOTAL AREA(ACRES)    =       2.0  TC(MIN.) =     7.36
 PEAK FLOW RATE(CFS)  =      12.24
================================================================================
================================================================================
 END OF RATIONAL METHOD ANALYSIS
```

# APPENDIX 5

# PROPOSED HYDROLOGY CALCULATIONS

FUSCOE ENGINEERING

**Job Name:** Costco Escondido
**Job #:** 756-101
**Run Name:**
**Date:** 8/29/2022

Proposed Condition - 100yr Storm Event

100YR P6 = 3.2 (100YR P24 = 5.4)

| Node to Node | | Code | Elev 1 (feet) | Elev 2 (feet) | Length (feet) | Runoff Coeff. | Area (ac.) | Comments | BANK | | |
|---|---|---|---|---|---|---|---|---|---|---|---|
| | | | | | | | | | 1 | 2 | 3 |
| 155 | 150 | 2 | 378.0 | 377.0 | 60 | 0.95 | 0.05 | INITIAL SUBAREA | | | |
| 150 | 145 | 6 | 377.0 | 369.7 | 420 | 0.95 | 1.91 | STREET FLOW, SUBAREA F | | | |
| 145 | 140 | 3 | 360.2 | 360.0 | 35 | | | PIPE FLOW | | | |
| 140 | 125 | 3 | 360.0 | 354.5 | 270 | | | PIPE FLOW | | | |
| 125 | 125 | 1 | | | | | | CONFLUENCE 1 OF 2 | | | |
| | | | | | | | | | | | |
| 165 | 160 | 2 | 374.2 | 374.0 | 50 | 0.95 | 0.1 | INITIAL SUBAREA | | | |
| 160 | 135 | 6 | 374.0 | 366.5 | 395 | 0.95 | 1.37 | STREET FLOW, SUBAREA E | | | |
| 135 | 130 | 3 | 357.9 | 357.7 | 15 | | | PIPE FLOW | | | |
| 130 | 125 | 3 | 357.7 | 354.5 | 155 | | | PIPE FLOW | | | |
| 125 | 125 | 1 | | | | | | CONFLUENCE 2 OF 2 | | | |
| 125 | 196 | 3 | 354.5 | 352.3 | 210 | | | PIPE FLOW | | | |
| 196 | 196 | 1 | | | | | | CONFLUENCE 1 OF 2 | | | |
| | | | | | | | | | | | |
| 175 | 170 | 2 | 374.1 | 374.0 | 35 | 0.95 | 0.13 | INITIAL SUBAREA | | | |
| 170 | 115 | 6 | 374.0 | 363.7 | 520 | 0.95 | 1.97 | STREET FLOW, SUBAREA J | | | |
| 115 | 196 | 3 | 357.2 | 352.3 | 150 | | | PIPE FLOW | | | |
| 196 | 196 | 1 | | | | | | CONFLUENCE 2 OF 2 | | | |
| 196 | 100 | 3 | 352.3 | 352.0 | 50 | | | PIPE FLOW | | | |
| 100 | 100 | 10 | | | | | | SAVE TO BANK 1 | X | | |
| | | | | | | | | | | | |
| 185 | 180 | 2 | 374.2 | 374.1 | 50 | 0.95 | 0.08 | INITIAL SUBAREA | | | |
| 180 | 120 | 6 | 374.1 | 363.6 | 495 | 0.95 | 1.02 | STREET FLOW, ADD SUBAREA D | | | |
| 120 | 110 | 3 | 360.2 | 359.8 | 50 | | | PIPE FLOW | | | |
| 110 | 110 | 1 | | | | | | CONFLUENCE 1 OF 2 | | | |
| | | | | | | | | | | | |
| 195 | 190 | 2 | 374.2 | 374.1 | 45 | 0.95 | 0.04 | INITIAL SUBAREA | | | |
| 190 | 110 | 6 | 374.1 | 362.7 | 515 | 0.95 | 0.61 | STREET FLOW, ADD SUBAREA C | | | |
| 110 | 110 | 1 | | | | | | CONFLUENCE 2 OF 2 | | | |
| 110 | 105 | 3 | 359.8 | 359.5 | 30 | | | PIPE FLOW | | | |
| 105 | 105 | 8 | | | | 0.95 | 0.13 | ADD SUBAREA K | | | |
| 105 | 100 | 3 | 359.5 | 352.0 | 175 | | | PIPE FLOW | | | |
| 100 | 100 | 1 | | | | | | CONFLUENCE 1 OF 2 | | | |
| | | | | | | | | | | | |
| 103 | 102 | 2 | 415.2 | 413.7 | 40 | 0.95 | 0.05 | INITIAL SUBAREA | | | |
| 102 | 101 | 6 | 413.7 | 374.0 | 950 | 0.95 | 2.39 | STREET FLOW, ADD SUBAREA O | | | |
| 101 | 100 | 3 | 371.0 | 352.0 | 360 | | | PIPE FLOW | | | |
| 100 | 100 | 1 | | | | | | CONFLUENCE 2 OF 2 | | | |
| 100 | 100 | 11 | | | | | | ADD BANK 1 | X | | |
| 100 | 100 | 12 | | | | | | CLEAR BANK 1 | | | |
| 100 | 99 | 3 | 352.0 | 350.9 | 40 | | | PIPE FLOW | | | |
| 99 | 99 | 8 | | | | 0.95 | 1.18 | ADD SUBAREA N | | | |
| 99 | 99 | 10 | | | | | | SAVE TO BANK 1 | X | | |

| | | | | | | | | | | | |
|---|---|---|---|---|---|---|---|---|---|---|---|
| 230 | 225 | 2 | 378.0 | 377.1 | 50 | 0.95 | 0.03 | INITIAL SUBAREA | | | |
| 225 | 220 | 6 | 377.1 | 369.7 | 310 | 0.95 | 1.26 | STREET FLOW, SUBAREA G | | | |
| 220 | 220 | 1 | | | | | | CONFLUENCE 1 OF 2 | | | |
| 250 | 250 | 2 | 374.1 | 373.4 | 60 | 0.95 | 0.08 | ADD SUBAREA | | | |
| 250 | 220 | 3 | 370.0 | 361.3 | 170 | | | PIPE FLOW | | | |
| 220 | 220 | 1 | | | | | | CONFLUENCE 2 OF 2 | | | |
| 220 | 215 | 3 | 361.3 | 353.9 | 120 | | | PIPE FLOW | | | |
| 215 | 215 | 10 | | | | | | SAVE TO BANK 2 | | X | |
| | | | | | | | | | | | |
| 245 | 240 | 2 | 372.5 | 370.8 | 75 | 0.95 | 0.05 | INITIAL SUBAREA | | | |
| 240 | 235 | 6 | 370.8 | 365.8 | 215 | 0.95 | 0.3 | STREET FLOW, SUBAREA L | | | |
| 235 | 205 | 3 | 363.0 | 361.7 | 120 | | | PIPE FLOW | | | |
| 205 | 205 | 1 | | | | | | CONFLUENCE 1 OF 2 | | | |
| | | | | | | | | | | | |
| 255 | 250 | 2 | 373.5 | 371.6 | 75 | 0.95 | 0.05 | INITIAL SUBAREA | | | |
| 250 | 210 | 6 | 371.6 | 364.0 | 175 | 0.95 | 0.68 | STREET FLOW, SUBAREA H | | | |
| 210 | 205 | 3 | 362.3 | 361.8 | 45 | | | PIPE FLOW | | | |
| 205 | 205 | 1 | | | | | | CONFLUENCE 2 OF 2 | | | |
| 205 | 215 | 3 | 361.8 | 353.9 | 55 | | | PIPE FLOW | | | |
| 215 | 215 | 10 | | | | | | BANK 2 | | X | |
| 215 | 200 | 3 | 353.9 | 346.0 | 430 | | | PIPE FLOW | | | |
| 230 | 230 | 8 | | | | 0.95 | 2.06 | ADD SUBAREA A | | | |
| 230 | 200 | 3 | 372.0 | 346.0 | 485 | | | PIPE FLOW | | | |
| 200 | 200 | 8 | | | | 0.95 | 1.69 | ADD SUBAREA M | | | |
| 200 | 200 | 11 | | | | | | BANK 2 | | X | |
| | | | | | | | | | | | |
| 310 | 305 | 2 | 372.0 | 370.8 | 60 | 0.95 | 0.07 | INITIAL SUBAREA | | | |
| 310 | 300 | 3 | 369.3 | 364.8 | 740 | | | PIPE FLOW | | | |
| 300 | 300 | 8 | | | | 0.95 | 1.93 | ADD SUBAREA B | | | |
| 300 | 300 | 10 | | | | | | BANK 3 | | | X |

```
**************************************************************************

        RATIONAL METHOD HYDROLOGY COMPUTER PROGRAM PACKAGE
        Reference: SAN DIEGO COUNTY FLOOD CONTROL DISTRICT
                2003,1985,1981 HYDROLOGY MANUAL
      (c) Copyright 1982-2016 Advanced Engineering Software (aes)
        Ver. 23.0 Release Date: 07/01/2016  License ID 1355

                Analysis prepared by:

                 Fuscoe Engineering
               6390 Greenwich Drive Suite 170
                 San Diego, CA 92122


 ************************* DESCRIPTION OF STUDY *************************
* COSTCO ESCONDIDO                                                      *
* 100 YR PROPOSED CONDITION                                             *
*                                                                       *
 *************************************************************************

  FILE NAME: CE-PROP.DAT
  TIME/DATE OF STUDY: 13:47 09/02/2022
------------------------------------------------------------------------
  USER SPECIFIED HYDROLOGY AND HYDRAULIC MODEL INFORMATION:
------------------------------------------------------------------------
  2003 SAN DIEGO MANUAL CRITERIA

  USER SPECIFIED STORM EVENT(YEAR) = 100.00
  6-HOUR DURATION PRECIPITATION (INCHES) =   3.200
  SPECIFIED MINIMUM PIPE SIZE(INCH) =   8.00
  SPECIFIED PERCENT OF GRADIENTS(DECIMAL) TO USE FOR FRICTION SLOPE = 0.90
  SAN DIEGO HYDROLOGY MANUAL "C"-VALUES USED FOR RATIONAL METHOD
  NOTE: USE MODIFIED RATIONAL METHOD PROCEDURES FOR CONFLUENCE ANALYSIS
  *USER-DEFINED STREET-SECTIONS FOR COUPLED PIPEFLOW AND STREETFLOW MODEL*
    HALF-  CROWN TO   STREET-CROSSFALL:   CURB  GUTTER-GEOMETRIES:  MANNING
    WIDTH  CROSSFALL  IN-  / OUT-/PARK-  HEIGHT  WIDTH  LIP   HIKE  FACTOR
NO.  (FT)    (FT)    SIDE / SIDE/ WAY    (FT)    (FT)  (FT)  (FT)    (n)
===  =====  =========  =================  ======  ===== ====== ===== =======
  1   20.0     12.0    0.020/0.020/0.020   0.50    1.50 0.0313 0.125 0.0150

  GLOBAL STREET FLOW-DEPTH CONSTRAINTS:
   1. Relative Flow-Depth =  0.00 FEET
     as (Maximum Allowable Street Flow Depth) - (Top-of-Curb)
   2. (Depth)*(Velocity) Constraint =  6.0 (FT*FT/S)
  *SIZE PIPE WITH A FLOW CAPACITY GREATER THAN
   OR EQUAL TO THE UPSTREAM TRIBUTARY PIPE.*
```

```
****************************************************************************
 FLOW PROCESS FROM NODE    155.00 TO NODE    150.00 IS CODE =  21
----------------------------------------------------------------------------
 >>>>>RATIONAL METHOD INITIAL SUBAREA ANALYSIS<<<<<
============================================================================
 *USER SPECIFIED(SUBAREA):
 USER-SPECIFIED RUNOFF COEFFICIENT = .9500
 S.C.S. CURVE NUMBER (AMC II) =   0
 INITIAL SUBAREA FLOW-LENGTH(FEET) =    60.00
 UPSTREAM ELEVATION(FEET) =    378.00
 DOWNSTREAM ELEVATION(FEET) =    377.00
 ELEVATION DIFFERENCE(FEET) =      1.00
 SUBAREA OVERLAND TIME OF FLOW(MIN.) =    1.764
  100 YEAR RAINFALL INTENSITY(INCH/HOUR) =  8.431
 NOTE: RAINFALL INTENSITY IS BASED ON Tc = 5-MINUTE.
 SUBAREA RUNOFF(CFS) =      0.40
 TOTAL AREA(ACRES) =      0.05   TOTAL RUNOFF(CFS) =      0.40

****************************************************************************
 FLOW PROCESS FROM NODE    150.00 TO NODE    145.00 IS CODE =  92
----------------------------------------------------------------------------
 >>>>>COMPUTE "V" GUTTER FLOW TRAVEL TIME THRU SUBAREA<<<<<
============================================================================
 UPSTREAM NODE ELEVATION(FEET) =    377.00
 DOWNSTREAM NODE ELEVATION(FEET) =    369.70
 CHANNEL LENGTH THRU SUBAREA(FEET) =   420.00
 "V" GUTTER WIDTH(FEET) =   3.00   GUTTER HIKE(FEET) =  0.050
 PAVEMENT LIP(FEET) =  0.010   MANNING'S N = .0150
 PAVEMENT CROSSFALL(DECIMAL NOTATION) = 0.01500
 MAXIMUM DEPTH(FEET) =   0.50
  100 YEAR RAINFALL INTENSITY(INCH/HOUR) =  8.431
 NOTE: RAINFALL INTENSITY IS BASED ON Tc = 5-MINUTE.
 *USER SPECIFIED(SUBAREA):
 USER-SPECIFIED RUNOFF COEFFICIENT = .9500
 S.C.S. CURVE NUMBER (AMC II) =   0
 TRAVEL TIME COMPUTED USING ESTIMATED FLOW(CFS) =      8.05
 TRAVEL TIME THRU SUBAREA BASED ON VELOCITY(FEET/SEC.) =   3.03
 AVERAGE FLOW DEPTH(FEET) =   0.23   FLOOD WIDTH(FEET) =   26.26
 "V" GUTTER FLOW TRAVEL TIME(MIN.) =   2.31   Tc(MIN.) =    4.07
 SUBAREA AREA(ACRES) =    1.91       SUBAREA RUNOFF(CFS) =   15.30
 AREA-AVERAGE RUNOFF COEFFICIENT =  0.950
 TOTAL AREA(ACRES) =        2.0        PEAK FLOW RATE(CFS) =      15.70

 END OF SUBAREA "V" GUTTER HYDRAULICS:
 DEPTH(FEET) =  0.29   FLOOD WIDTH(FEET) =   34.05
 FLOW VELOCITY(FEET/SEC.) =   3.55   DEPTH*VELOCITY(FT*FT/SEC) =   1.04
 LONGEST FLOWPATH FROM NODE    155.00 TO NODE    145.00 =     480.00 FEET.
```

```
****************************************************************************
 FLOW PROCESS FROM NODE    145.00 TO NODE    140.00 IS CODE =  31
----------------------------------------------------------------------------
 >>>>>COMPUTE PIPE-FLOW TRAVEL TIME THRU SUBAREA<<<<<
 >>>>>USING COMPUTER-ESTIMATED PIPESIZE (NON-PRESSURE FLOW)<<<<<
============================================================================
 ELEVATION DATA: UPSTREAM(FEET) =   360.20  DOWNSTREAM(FEET) =   360.00
 FLOW LENGTH(FEET) =    35.00   MANNING'S N =  0.013
 DEPTH OF FLOW IN  24.0 INCH PIPE IS  19.0 INCHES
 PIPE-FLOW VELOCITY(FEET/SEC.) =   5.88
 ESTIMATED PIPE DIAMETER(INCH) =  24.00    NUMBER OF PIPES =   1
 PIPE-FLOW(CFS) =      15.70
 PIPE TRAVEL TIME(MIN.) =   0.10    Tc(MIN.) =    4.17
 LONGEST FLOWPATH FROM NODE    155.00 TO NODE    140.00 =     515.00 FEET.

****************************************************************************
 FLOW PROCESS FROM NODE    140.00 TO NODE    125.00 IS CODE =  31
----------------------------------------------------------------------------
 >>>>>COMPUTE PIPE-FLOW TRAVEL TIME THRU SUBAREA<<<<<
 >>>>>USING COMPUTER-ESTIMATED PIPESIZE (NON-PRESSURE FLOW)<<<<<
============================================================================
 ELEVATION DATA: UPSTREAM(FEET) =   360.00  DOWNSTREAM(FEET) =   354.50
 FLOW LENGTH(FEET) =   270.00   MANNING'S N =  0.013
 DEPTH OF FLOW IN  21.0 INCH PIPE IS  13.3 INCHES
 PIPE-FLOW VELOCITY(FEET/SEC.) =   9.74
 ESTIMATED PIPE DIAMETER(INCH) =  21.00    NUMBER OF PIPES =   1
 PIPE-FLOW(CFS) =      15.70
 PIPE TRAVEL TIME(MIN.) =   0.46    Tc(MIN.) =    4.64
 LONGEST FLOWPATH FROM NODE    155.00 TO NODE    125.00 =     785.00 FEET.

****************************************************************************
 FLOW PROCESS FROM NODE    125.00 TO NODE    125.00 IS CODE =   1
----------------------------------------------------------------------------
 >>>>>DESIGNATE INDEPENDENT STREAM FOR CONFLUENCE<<<<<
============================================================================
 TOTAL NUMBER OF STREAMS =  2
 CONFLUENCE VALUES USED FOR INDEPENDENT STREAM  1 ARE:
 TIME OF CONCENTRATION(MIN.) =    4.64
 RAINFALL INTENSITY(INCH/HR) =   8.43
 TOTAL STREAM AREA(ACRES) =     1.96
 PEAK FLOW RATE(CFS) AT CONFLUENCE =     15.70

****************************************************************************
 FLOW PROCESS FROM NODE    165.00 TO NODE    160.00 IS CODE =  21
----------------------------------------------------------------------------
 >>>>>RATIONAL METHOD INITIAL SUBAREA ANALYSIS<<<<<
============================================================================
```

```
 *USER SPECIFIED(SUBAREA):
 USER-SPECIFIED RUNOFF COEFFICIENT = .9500
 S.C.S. CURVE NUMBER (AMC II) =  0
 INITIAL SUBAREA FLOW-LENGTH(FEET) =  50.00
 UPSTREAM ELEVATION(FEET) =  374.20
 DOWNSTREAM ELEVATION(FEET) =  374.00
 ELEVATION DIFFERENCE(FEET) =  0.20
 SUBAREA OVERLAND TIME OF FLOW(MIN.) =  2.405
 WARNING: THE MINIMUM OVERLAND FLOW SLOPE, 0.5%, IS USED IN Tc CALCULATION!
  100 YEAR RAINFALL INTENSITY(INCH/HOUR) =  8.431
 NOTE: RAINFALL INTENSITY IS BASED ON Tc = 5-MINUTE.
 SUBAREA RUNOFF(CFS) =  0.80
 TOTAL AREA(ACRES) =  0.10  TOTAL RUNOFF(CFS) =  0.80

****************************************************************************
 FLOW PROCESS FROM NODE  160.00 TO NODE  135.00 IS CODE =  62
----------------------------------------------------------------------------
 >>>>>COMPUTE STREET FLOW TRAVEL TIME THRU SUBAREA<<<<<
 >>>>>(STREET TABLE SECTION #  1 USED)<<<<<
============================================================================
 UPSTREAM ELEVATION(FEET) =  374.00  DOWNSTREAM ELEVATION(FEET) =  366.50
 STREET LENGTH(FEET) =  395.00  CURB HEIGHT(INCHES) =  6.0
 STREET HALFWIDTH(FEET) = 20.00

 DISTANCE FROM CROWN TO CROSSFALL GRADEBREAK(FEET) =  12.00
 INSIDE STREET CROSSFALL(DECIMAL) =  0.020
 OUTSIDE STREET CROSSFALL(DECIMAL)  =  0.020

 SPECIFIED NUMBER OF HALFSTREETS CARRYING RUNOFF =  2
 STREET PARKWAY CROSSFALL(DECIMAL)  =  0.020
 Manning's FRICTION FACTOR for Streetflow Section(curb-to-curb) =  0.0150
 Manning's FRICTION FACTOR for Back-of-Walk Flow Section =  0.0150

  **TRAVEL TIME COMPUTED USING ESTIMATED FLOW(CFS) =  6.29
  STREETFLOW MODEL RESULTS USING ESTIMATED FLOW:
  STREET FLOW DEPTH(FEET) =  0.32
  HALFSTREET FLOOD WIDTH(FEET) =  9.64
  AVERAGE FLOW VELOCITY(FEET/SEC.) =  3.00
  PRODUCT OF DEPTH&VELOCITY(FT*FT/SEC.) =  0.96
 STREET FLOW TRAVEL TIME(MIN.) =  2.19  Tc(MIN.) =  4.60
  100 YEAR RAINFALL INTENSITY(INCH/HOUR) =  8.431
 NOTE: RAINFALL INTENSITY IS BASED ON Tc = 5-MINUTE.
 *USER SPECIFIED(SUBAREA):
 USER-SPECIFIED RUNOFF COEFFICIENT = .9500
 S.C.S. CURVE NUMBER (AMC II) =  0
 AREA-AVERAGE RUNOFF COEFFICIENT =  0.950
 SUBAREA AREA(ACRES) =  1.37  SUBAREA RUNOFF(CFS) =  10.97
 TOTAL AREA(ACRES) =  1.5  PEAK FLOW RATE(CFS) =  11.77
```

```
 END OF SUBAREA STREET FLOW HYDRAULICS:
 DEPTH(FEET) = 0.38   HALFSTREET FLOOD WIDTH(FEET) =  12.45
 FLOW VELOCITY(FEET/SEC.) =  3.53   DEPTH*VELOCITY(FT*FT/SEC.) =   1.32
 LONGEST FLOWPATH FROM NODE    165.00 TO NODE    135.00 =     445.00 FEET.

****************************************************************************
 FLOW PROCESS FROM NODE    135.00 TO NODE    130.00 IS CODE =  31
----------------------------------------------------------------------------
 >>>>>COMPUTE PIPE-FLOW TRAVEL TIME THRU SUBAREA<<<<<
 >>>>>USING COMPUTER-ESTIMATED PIPESIZE (NON-PRESSURE FLOW)<<<<<
============================================================================
 ELEVATION DATA: UPSTREAM(FEET) =   357.90  DOWNSTREAM(FEET) =   357.70
 FLOW LENGTH(FEET) =    15.00   MANNING'S N =  0.013
 DEPTH OF FLOW IN  21.0 INCH PIPE IS  12.7 INCHES
 PIPE-FLOW VELOCITY(FEET/SEC.) =   7.75
 ESTIMATED PIPE DIAMETER(INCH) =  21.00    NUMBER OF PIPES =   1
 PIPE-FLOW(CFS) =     11.77
 PIPE TRAVEL TIME(MIN.) =   0.03    Tc(MIN.) =    4.63
 LONGEST FLOWPATH FROM NODE    165.00 TO NODE    130.00 =     460.00 FEET.

****************************************************************************
 FLOW PROCESS FROM NODE    130.00 TO NODE    125.00 IS CODE =  31
----------------------------------------------------------------------------
 >>>>>COMPUTE PIPE-FLOW TRAVEL TIME THRU SUBAREA<<<<<
 >>>>>USING COMPUTER-ESTIMATED PIPESIZE (NON-PRESSURE FLOW)<<<<<
============================================================================
 ELEVATION DATA: UPSTREAM(FEET) =   357.70  DOWNSTREAM(FEET) =   354.50
 FLOW LENGTH(FEET) =   155.00   MANNING'S N =  0.013
 DEPTH OF FLOW IN  18.0 INCH PIPE IS  12.4 INCHES
 PIPE-FLOW VELOCITY(FEET/SEC.) =   9.05
 ESTIMATED PIPE DIAMETER(INCH) =  18.00    NUMBER OF PIPES =   1
 PIPE-FLOW(CFS) =     11.77
 PIPE TRAVEL TIME(MIN.) =   0.29    Tc(MIN.) =    4.92
 LONGEST FLOWPATH FROM NODE    165.00 TO NODE    125.00 =     615.00 FEET.

****************************************************************************
 FLOW PROCESS FROM NODE    125.00 TO NODE    125.00 IS CODE =   1
----------------------------------------------------------------------------
 >>>>>DESIGNATE INDEPENDENT STREAM FOR CONFLUENCE<<<<<
 >>>>>AND COMPUTE VARIOUS CONFLUENCED STREAM VALUES<<<<<
============================================================================
 TOTAL NUMBER OF STREAMS =  2
 CONFLUENCE VALUES USED FOR INDEPENDENT STREAM  2 ARE:
 TIME OF CONCENTRATION(MIN.) =    4.92
 RAINFALL INTENSITY(INCH/HR) =   8.43
 TOTAL STREAM AREA(ACRES) =     1.47
 PEAK FLOW RATE(CFS) AT CONFLUENCE =     11.77
```

```
 ** CONFLUENCE DATA **
 STREAM    RUNOFF     Tc     INTENSITY     AREA
 NUMBER     (CFS)    (MIN.)  (INCH/HOUR)   (ACRE)
   1      15.70    4.64       8.431        1.96
   2      11.77    4.92       8.431        1.47

 RAINFALL INTENSITY AND TIME OF CONCENTRATION RATIO
 CONFLUENCE FORMULA USED FOR  2 STREAMS.

 ** PEAK FLOW RATE TABLE **
 STREAM    RUNOFF     Tc     INTENSITY
 NUMBER     (CFS)    (MIN.)  (INCH/HOUR)
   1      26.80    4.64       8.431
   2      27.47    4.92       8.431

 COMPUTED CONFLUENCE ESTIMATES ARE AS FOLLOWS:
 PEAK FLOW RATE(CFS) =     27.47   Tc(MIN.) =    4.92
 TOTAL AREA(ACRES) =       3.4
 LONGEST FLOWPATH FROM NODE    155.00 TO NODE    125.00 =     785.00 FEET.

****************************************************************************
 FLOW PROCESS FROM NODE    125.00 TO NODE    196.00 IS CODE =  31
----------------------------------------------------------------------------
 >>>>>COMPUTE PIPE-FLOW TRAVEL TIME THRU SUBAREA<<<<<
 >>>>>USING COMPUTER-ESTIMATED PIPESIZE (NON-PRESSURE FLOW)<<<<<
============================================================================
 ELEVATION DATA: UPSTREAM(FEET) =   354.50  DOWNSTREAM(FEET) =   352.30
 FLOW LENGTH(FEET) =   210.00   MANNING'S N =  0.013
 DEPTH OF FLOW IN  27.0 INCH PIPE IS  20.3 INCHES
 PIPE-FLOW VELOCITY(FEET/SEC.) =   8.57
 ESTIMATED PIPE DIAMETER(INCH) =  27.00    NUMBER OF PIPES =   1
 PIPE-FLOW(CFS) =     27.47
 PIPE TRAVEL TIME(MIN.) =   0.41    Tc(MIN.) =    5.32
 LONGEST FLOWPATH FROM NODE    155.00 TO NODE    196.00 =     995.00 FEET.

****************************************************************************
 FLOW PROCESS FROM NODE    196.00 TO NODE    196.00 IS CODE =   1
----------------------------------------------------------------------------
 >>>>>DESIGNATE INDEPENDENT STREAM FOR CONFLUENCE<<<<<
============================================================================
 TOTAL NUMBER OF STREAMS =  2
 CONFLUENCE VALUES USED FOR INDEPENDENT STREAM  1 ARE:
 TIME OF CONCENTRATION(MIN.) =    5.32
 RAINFALL INTENSITY(INCH/HR) =   8.10
 TOTAL STREAM AREA(ACRES) =     3.43
 PEAK FLOW RATE(CFS) AT CONFLUENCE =     27.47
```

```
****************************************************************************
 FLOW PROCESS FROM NODE    175.00 TO NODE    170.00 IS CODE =  21
----------------------------------------------------------------------------
 >>>>>RATIONAL METHOD INITIAL SUBAREA ANALYSIS<<<<<
============================================================================
 *USER SPECIFIED(SUBAREA):
 USER-SPECIFIED RUNOFF COEFFICIENT = .9500
 S.C.S. CURVE NUMBER (AMC II) =  0
 INITIAL SUBAREA FLOW-LENGTH(FEET) =    35.00
 UPSTREAM ELEVATION(FEET) =    374.10
 DOWNSTREAM ELEVATION(FEET) =    374.00
 ELEVATION DIFFERENCE(FEET) =      0.10
 SUBAREA OVERLAND TIME OF FLOW(MIN.) =    2.012
 WARNING: THE MINIMUM OVERLAND FLOW SLOPE, 0.5%, IS USED IN Tc CALCULATION!
  100 YEAR RAINFALL INTENSITY(INCH/HOUR) =  8.431
 NOTE: RAINFALL INTENSITY IS BASED ON Tc = 5-MINUTE.
 SUBAREA RUNOFF(CFS) =      0.64
 TOTAL AREA(ACRES) =      0.08   TOTAL RUNOFF(CFS) =      0.64

****************************************************************************
 FLOW PROCESS FROM NODE    170.00 TO NODE    115.00 IS CODE =  62
----------------------------------------------------------------------------
 >>>>>COMPUTE STREET FLOW TRAVEL TIME THRU SUBAREA<<<<<
 >>>>>(STREET TABLE SECTION #  1 USED)<<<<<
============================================================================
 UPSTREAM ELEVATION(FEET) =  374.00  DOWNSTREAM ELEVATION(FEET) =  363.70
 STREET LENGTH(FEET) =   520.00   CURB HEIGHT(INCHES) =  6.0
 STREET HALFWIDTH(FEET) = 20.00

 DISTANCE FROM CROWN TO CROSSFALL GRADEBREAK(FEET) =  12.00
 INSIDE STREET CROSSFALL(DECIMAL) =  0.020
 OUTSIDE STREET CROSSFALL(DECIMAL)  =  0.020

 SPECIFIED NUMBER OF HALFSTREETS CARRYING RUNOFF =  2
 STREET PARKWAY CROSSFALL(DECIMAL)  =  0.020
 Manning's FRICTION FACTOR for Streetflow Section(curb-to-curb) =   0.0150
 Manning's FRICTION FACTOR for Back-of-Walk Flow Section =   0.0150

  **TRAVEL TIME COMPUTED USING ESTIMATED FLOW(CFS) =       8.53
  STREETFLOW MODEL RESULTS USING ESTIMATED FLOW:
  STREET FLOW DEPTH(FEET) =  0.34
  HALFSTREET FLOOD WIDTH(FEET) =   10.86
  AVERAGE FLOW VELOCITY(FEET/SEC.) =    3.29
  PRODUCT OF DEPTH&VELOCITY(FT*FT/SEC.) =    1.13
 STREET FLOW TRAVEL TIME(MIN.) =   2.64   Tc(MIN.) =    4.65
  100 YEAR RAINFALL INTENSITY(INCH/HOUR) =  8.431
 NOTE: RAINFALL INTENSITY IS BASED ON Tc = 5-MINUTE.
 *USER SPECIFIED(SUBAREA):
```

```
 USER-SPECIFIED RUNOFF COEFFICIENT = .9500
 S.C.S. CURVE NUMBER (AMC II) =  0
 AREA-AVERAGE RUNOFF COEFFICIENT =  0.950
 SUBAREA AREA(ACRES) =    1.97     SUBAREA RUNOFF(CFS) =   15.78
 TOTAL AREA(ACRES) =       2.0      PEAK FLOW RATE(CFS) =     16.42

 END OF SUBAREA STREET FLOW HYDRAULICS:
 DEPTH(FEET) = 0.41   HALFSTREET FLOOD WIDTH(FEET) =  14.14
 FLOW VELOCITY(FEET/SEC.) =  3.88   DEPTH*VELOCITY(FT*FT/SEC.) =   1.59
 LONGEST FLOWPATH FROM NODE    175.00 TO NODE    115.00 =     555.00 FEET.

****************************************************************************
 FLOW PROCESS FROM NODE    115.00 TO NODE    196.00 IS CODE =  31
----------------------------------------------------------------------------
 >>>>>COMPUTE PIPE-FLOW TRAVEL TIME THRU SUBAREA<<<<<
 >>>>>USING COMPUTER-ESTIMATED PIPESIZE (NON-PRESSURE FLOW)<<<<<
============================================================================
 ELEVATION DATA: UPSTREAM(FEET) =   357.20  DOWNSTREAM(FEET) =   352.30
 FLOW LENGTH(FEET) =    50.00   MANNING'S N =  0.013
 DEPTH OF FLOW IN  15.0 INCH PIPE IS  10.7 INCHES
 PIPE-FLOW VELOCITY(FEET/SEC.) =  17.56
 ESTIMATED PIPE DIAMETER(INCH) =  15.00    NUMBER OF PIPES =   1
 PIPE-FLOW(CFS) =      16.42
 PIPE TRAVEL TIME(MIN.) =   0.05    Tc(MIN.) =    4.70
 LONGEST FLOWPATH FROM NODE    175.00 TO NODE    196.00 =     605.00 FEET.

****************************************************************************
 FLOW PROCESS FROM NODE    196.00 TO NODE    196.00 IS CODE =   1
----------------------------------------------------------------------------
 >>>>>DESIGNATE INDEPENDENT STREAM FOR CONFLUENCE<<<<<
 >>>>>AND COMPUTE VARIOUS CONFLUENCED STREAM VALUES<<<<<
============================================================================
 TOTAL NUMBER OF STREAMS =  2
 CONFLUENCE VALUES USED FOR INDEPENDENT STREAM  2 ARE:
 TIME OF CONCENTRATION(MIN.) =    4.70
 RAINFALL INTENSITY(INCH/HR) =   8.43
 TOTAL STREAM AREA(ACRES) =     2.05
 PEAK FLOW RATE(CFS) AT CONFLUENCE =     16.42

 ** CONFLUENCE DATA **
 STREAM     RUNOFF      Tc     INTENSITY     AREA
 NUMBER      (CFS)    (MIN.)   (INCH/HOUR)    (ACRE)
    1       27.47    5.32       8.096         3.43
    2       16.42    4.70       8.431         2.05

 RAINFALL INTENSITY AND TIME OF CONCENTRATION RATIO
 CONFLUENCE FORMULA USED FOR  2 STREAMS.
```

```
 ** PEAK FLOW RATE TABLE **
 STREAM     RUNOFF     Tc     INTENSITY
 NUMBER      (CFS)    (MIN.)   (INCH/HOUR)
    1       42.80     4.70       8.431
    2       43.24     5.32       8.096

 COMPUTED CONFLUENCE ESTIMATES ARE AS FOLLOWS:
 PEAK FLOW RATE(CFS) =      43.24   Tc(MIN.) =    5.32
 TOTAL AREA(ACRES) =       5.5
 LONGEST FLOWPATH FROM NODE    155.00 TO NODE    196.00 =     995.00 FEET.

****************************************************************************
 FLOW PROCESS FROM NODE    196.00 TO NODE    100.00 IS CODE =  31
----------------------------------------------------------------------------
 >>>>>COMPUTE PIPE-FLOW TRAVEL TIME THRU SUBAREA<<<<<
 >>>>>USING COMPUTER-ESTIMATED PIPESIZE (NON-PRESSURE FLOW)<<<<<
============================================================================
 ELEVATION DATA: UPSTREAM(FEET) =   352.30  DOWNSTREAM(FEET) =   352.00
 FLOW LENGTH(FEET) =    50.00   MANNING'S N =  0.013
 DEPTH OF FLOW IN  36.0 INCH PIPE IS  26.3 INCHES
 PIPE-FLOW VELOCITY(FEET/SEC.) =   7.83
 ESTIMATED PIPE DIAMETER(INCH) =  36.00    NUMBER OF PIPES =   1
 PIPE-FLOW(CFS) =      43.24
 PIPE TRAVEL TIME(MIN.) =   0.11    Tc(MIN.) =    5.43
 LONGEST FLOWPATH FROM NODE    155.00 TO NODE    100.00 =    1045.00 FEET.

****************************************************************************
 FLOW PROCESS FROM NODE    100.00 TO NODE    100.00 IS CODE =  10
----------------------------------------------------------------------------
 >>>>>MAIN-STREAM MEMORY COPIED ONTO MEMORY BANK # 1 <<<<<
============================================================================

****************************************************************************
 FLOW PROCESS FROM NODE    185.00 TO NODE    180.00 IS CODE =  21
----------------------------------------------------------------------------
 >>>>>RATIONAL METHOD INITIAL SUBAREA ANALYSIS<<<<<
============================================================================
 *USER SPECIFIED(SUBAREA):
 USER-SPECIFIED RUNOFF COEFFICIENT = .9500
 S.C.S. CURVE NUMBER (AMC II) =   0
 INITIAL SUBAREA FLOW-LENGTH(FEET) =    50.00
 UPSTREAM ELEVATION(FEET) =    374.20
 DOWNSTREAM ELEVATION(FEET) =    374.10
 ELEVATION DIFFERENCE(FEET) =      0.10
 SUBAREA OVERLAND TIME OF FLOW(MIN.) =    2.405
 WARNING: THE MINIMUM OVERLAND FLOW SLOPE, 0.5%, IS USED IN Tc CALCULATION!
  100 YEAR RAINFALL INTENSITY(INCH/HOUR) =  8.431
 NOTE: RAINFALL INTENSITY IS BASED ON Tc = 5-MINUTE.
```

```
 SUBAREA RUNOFF(CFS) =      0.64
 TOTAL AREA(ACRES) =      0.08   TOTAL RUNOFF(CFS) =      0.64

****************************************************************************
 FLOW PROCESS FROM NODE    180.00 TO NODE    120.00 IS CODE =  62
----------------------------------------------------------------------------
 >>>>>COMPUTE STREET FLOW TRAVEL TIME THRU SUBAREA<<<<<
 >>>>>(STREET TABLE SECTION #  1 USED)<<<<<
============================================================================
 UPSTREAM ELEVATION(FEET) =  374.10  DOWNSTREAM ELEVATION(FEET) =  363.60
 STREET LENGTH(FEET) =   495.00   CURB HEIGHT(INCHES) =  6.0
 STREET HALFWIDTH(FEET) = 20.00

 DISTANCE FROM CROWN TO CROSSFALL GRADEBREAK(FEET) =  12.00
 INSIDE STREET CROSSFALL(DECIMAL) =  0.020
 OUTSIDE STREET CROSSFALL(DECIMAL)  =  0.020

 SPECIFIED NUMBER OF HALFSTREETS CARRYING RUNOFF =  2
 STREET PARKWAY CROSSFALL(DECIMAL)  =  0.020
 Manning's FRICTION FACTOR for Streetflow Section(curb-to-curb) =   0.0150
 Manning's FRICTION FACTOR for Back-of-Walk Flow Section =   0.0150

  **TRAVEL TIME COMPUTED USING ESTIMATED FLOW(CFS) =       4.63
  STREETFLOW MODEL RESULTS USING ESTIMATED FLOW:
  STREET FLOW DEPTH(FEET) =  0.29
  HALFSTREET FLOOD WIDTH(FEET) =    8.14
  AVERAGE FLOW VELOCITY(FEET/SEC.) =    2.97
  PRODUCT OF DEPTH&VELOCITY(FT*FT/SEC.) =    0.86
 STREET FLOW TRAVEL TIME(MIN.) =   2.78   Tc(MIN.) =    5.19
  100 YEAR RAINFALL INTENSITY(INCH/HOUR) =  8.233
 *USER SPECIFIED(SUBAREA):
 USER-SPECIFIED RUNOFF COEFFICIENT = .9500
 S.C.S. CURVE NUMBER (AMC II) =   0
 AREA-AVERAGE RUNOFF COEFFICIENT =  0.950
 SUBAREA AREA(ACRES) =    1.02     SUBAREA RUNOFF(CFS) =    7.98
 TOTAL AREA(ACRES) =       1.1       PEAK FLOW RATE(CFS) =      8.60

 END OF SUBAREA STREET FLOW HYDRAULICS:
 DEPTH(FEET) = 0.34   HALFSTREET FLOOD WIDTH(FEET) =  10.67
 FLOW VELOCITY(FEET/SEC.) =  3.42   DEPTH*VELOCITY(FT*FT/SEC.) =   1.16
 LONGEST FLOWPATH FROM NODE    185.00 TO NODE    120.00 =     545.00 FEET.

****************************************************************************
 FLOW PROCESS FROM NODE    120.00 TO NODE    110.00 IS CODE =  31
----------------------------------------------------------------------------
 >>>>>COMPUTE PIPE-FLOW TRAVEL TIME THRU SUBAREA<<<<<
 >>>>>USING COMPUTER-ESTIMATED PIPESIZE (NON-PRESSURE FLOW)<<<<<
============================================================================
```

```
 ELEVATION DATA: UPSTREAM(FEET) =   360.20  DOWNSTREAM(FEET) =   359.80
 FLOW LENGTH(FEET) =    50.00   MANNING'S N =  0.013
 DEPTH OF FLOW IN  18.0 INCH PIPE IS  14.2 INCHES
 PIPE-FLOW VELOCITY(FEET/SEC.) =   5.75
 ESTIMATED PIPE DIAMETER(INCH) =  18.00    NUMBER OF PIPES =   1
 PIPE-FLOW(CFS) =       8.60
 PIPE TRAVEL TIME(MIN.) =   0.15    Tc(MIN.) =    5.33
 LONGEST FLOWPATH FROM NODE    185.00 TO NODE    110.00 =     595.00 FEET.

****************************************************************************
 FLOW PROCESS FROM NODE    110.00 TO NODE    110.00 IS CODE =   1
----------------------------------------------------------------------------
 >>>>>DESIGNATE INDEPENDENT STREAM FOR CONFLUENCE<<<<<
============================================================================
 TOTAL NUMBER OF STREAMS =  2
 CONFLUENCE VALUES USED FOR INDEPENDENT STREAM  1 ARE:
 TIME OF CONCENTRATION(MIN.) =    5.33
 RAINFALL INTENSITY(INCH/HR) =   8.09
 TOTAL STREAM AREA(ACRES) =     1.10
 PEAK FLOW RATE(CFS) AT CONFLUENCE =      8.60

****************************************************************************
 FLOW PROCESS FROM NODE    195.00 TO NODE    190.00 IS CODE =  21
----------------------------------------------------------------------------
 >>>>>RATIONAL METHOD INITIAL SUBAREA ANALYSIS<<<<<
============================================================================
 *USER SPECIFIED(SUBAREA):
 USER-SPECIFIED RUNOFF COEFFICIENT = .9500
 S.C.S. CURVE NUMBER (AMC II) =   0
 INITIAL SUBAREA FLOW-LENGTH(FEET) =    45.00
 UPSTREAM ELEVATION(FEET) =    374.20
 DOWNSTREAM ELEVATION(FEET) =    374.10
 ELEVATION DIFFERENCE(FEET) =      0.10
 SUBAREA OVERLAND TIME OF FLOW(MIN.) =    2.282
 WARNING: THE MINIMUM OVERLAND FLOW SLOPE, 0.5%, IS USED IN Tc CALCULATION!
  100 YEAR RAINFALL INTENSITY(INCH/HOUR) =  8.431
 NOTE: RAINFALL INTENSITY IS BASED ON Tc = 5-MINUTE.
 SUBAREA RUNOFF(CFS) =      0.32
 TOTAL AREA(ACRES) =      0.04   TOTAL RUNOFF(CFS) =      0.32

****************************************************************************
 FLOW PROCESS FROM NODE    190.00 TO NODE    110.00 IS CODE =  62
----------------------------------------------------------------------------
 >>>>>COMPUTE STREET FLOW TRAVEL TIME THRU SUBAREA<<<<<
 >>>>>(STREET TABLE SECTION #  1 USED)<<<<<
============================================================================
 UPSTREAM ELEVATION(FEET) =  374.10  DOWNSTREAM ELEVATION(FEET) =  362.70
 STREET LENGTH(FEET) =   515.00   CURB HEIGHT(INCHES) =  6.0
```

```
 STREET HALFWIDTH(FEET) = 20.00

 DISTANCE FROM CROWN TO CROSSFALL GRADEBREAK(FEET) =  12.00
 INSIDE STREET CROSSFALL(DECIMAL) =  0.020
 OUTSIDE STREET CROSSFALL(DECIMAL)  =  0.020

 SPECIFIED NUMBER OF HALFSTREETS CARRYING RUNOFF =  2
 STREET PARKWAY CROSSFALL(DECIMAL)  =  0.020
 Manning's FRICTION FACTOR for Streetflow Section(curb-to-curb) =   0.0150
 Manning's FRICTION FACTOR for Back-of-Walk Flow Section =   0.0150

  **TRAVEL TIME COMPUTED USING ESTIMATED FLOW(CFS) =       2.62
  STREETFLOW MODEL RESULTS USING ESTIMATED FLOW:
  STREET FLOW DEPTH(FEET) =  0.25
  HALFSTREET FLOOD WIDTH(FEET) =    6.10
  AVERAGE FLOW VELOCITY(FEET/SEC.) =    2.68
  PRODUCT OF DEPTH&VELOCITY(FT*FT/SEC.) =    0.66
 STREET FLOW TRAVEL TIME(MIN.) =   3.21   Tc(MIN.) =    5.49
  100 YEAR RAINFALL INTENSITY(INCH/HOUR) =  7.941
 *USER SPECIFIED(SUBAREA):
 USER-SPECIFIED RUNOFF COEFFICIENT = .9500
 S.C.S. CURVE NUMBER (AMC II) =   0
 AREA-AVERAGE RUNOFF COEFFICIENT =  0.950
 SUBAREA AREA(ACRES) =    0.61     SUBAREA RUNOFF(CFS) =    4.60
 TOTAL AREA(ACRES) =       0.7       PEAK FLOW RATE(CFS) =       4.90

 END OF SUBAREA STREET FLOW HYDRAULICS:
 DEPTH(FEET) = 0.29   HALFSTREET FLOOD WIDTH(FEET) =   8.33
 FLOW VELOCITY(FEET/SEC.) =  3.02   DEPTH*VELOCITY(FT*FT/SEC.) =   0.88
 LONGEST FLOWPATH FROM NODE    195.00 TO NODE    110.00 =     560.00 FEET.

****************************************************************************
 FLOW PROCESS FROM NODE    110.00 TO NODE    110.00 IS CODE =   1
----------------------------------------------------------------------------
 >>>>>DESIGNATE INDEPENDENT STREAM FOR CONFLUENCE<<<<<
 >>>>>AND COMPUTE VARIOUS CONFLUENCED STREAM VALUES<<<<<
============================================================================
 TOTAL NUMBER OF STREAMS =  2
 CONFLUENCE VALUES USED FOR INDEPENDENT STREAM  2 ARE:
 TIME OF CONCENTRATION(MIN.) =    5.49
 RAINFALL INTENSITY(INCH/HR) =   7.94
 TOTAL STREAM AREA(ACRES) =     0.65
 PEAK FLOW RATE(CFS) AT CONFLUENCE =      4.90

 ** CONFLUENCE DATA **
 STREAM     RUNOFF      Tc     INTENSITY     AREA
 NUMBER      (CFS)    (MIN.)   (INCH/HOUR)    (ACRE)
    1       8.60     5.33       8.088         1.10
```

```
    2       4.90     5.49       7.941         0.65

 RAINFALL INTENSITY AND TIME OF CONCENTRATION RATIO
 CONFLUENCE FORMULA USED FOR  2 STREAMS.

 ** PEAK FLOW RATE TABLE **
 STREAM     RUNOFF      Tc      INTENSITY
 NUMBER      (CFS)    (MIN.)   (INCH/HOUR)
    1       13.37     5.33       8.088
    2       13.35     5.49       7.941

 COMPUTED CONFLUENCE ESTIMATES ARE AS FOLLOWS:
 PEAK FLOW RATE(CFS) =      13.37   Tc(MIN.) =    5.33
 TOTAL AREA(ACRES) =       1.8
 LONGEST FLOWPATH FROM NODE    185.00 TO NODE    110.00 =     595.00 FEET.

****************************************************************************
 FLOW PROCESS FROM NODE    110.00 TO NODE    105.00 IS CODE =  31
----------------------------------------------------------------------------
 >>>>>COMPUTE PIPE-FLOW TRAVEL TIME THRU SUBAREA<<<<<
 >>>>>USING COMPUTER-ESTIMATED PIPESIZE (NON-PRESSURE FLOW)<<<<<
============================================================================
 ELEVATION DATA: UPSTREAM(FEET) =   359.80  DOWNSTREAM(FEET) =   359.50
 FLOW LENGTH(FEET) =    30.00   MANNING'S N =  0.013
 DEPTH OF FLOW IN  21.0 INCH PIPE IS  15.4 INCHES
 PIPE-FLOW VELOCITY(FEET/SEC.) =   7.06
 ESTIMATED PIPE DIAMETER(INCH) =  21.00    NUMBER OF PIPES =   1
 PIPE-FLOW(CFS) =      13.37
 PIPE TRAVEL TIME(MIN.) =   0.07    Tc(MIN.) =    5.40
 LONGEST FLOWPATH FROM NODE    185.00 TO NODE    105.00 =     625.00 FEET.

****************************************************************************
 FLOW PROCESS FROM NODE    105.00 TO NODE    105.00 IS CODE =  81
----------------------------------------------------------------------------
 >>>>>ADDITION OF SUBAREA TO MAINLINE PEAK FLOW<<<<<
============================================================================
  100 YEAR RAINFALL INTENSITY(INCH/HOUR) =  8.020
 *USER SPECIFIED(SUBAREA):
 USER-SPECIFIED RUNOFF COEFFICIENT = .9500
 S.C.S. CURVE NUMBER (AMC II) =   0
 AREA-AVERAGE RUNOFF COEFFICIENT = 0.9500
 SUBAREA AREA(ACRES) =    0.13   SUBAREA RUNOFF(CFS) =    0.99
 TOTAL AREA(ACRES) =       1.9   TOTAL RUNOFF(CFS) =      14.32
 TC(MIN.) =    5.40

****************************************************************************
 FLOW PROCESS FROM NODE    105.00 TO NODE    100.00 IS CODE =  31
----------------------------------------------------------------------------
```

```
 >>>>>COMPUTE PIPE-FLOW TRAVEL TIME THRU SUBAREA<<<<<
 >>>>>USING COMPUTER-ESTIMATED PIPESIZE (NON-PRESSURE FLOW)<<<<<
================================================================================
 ELEVATION DATA: UPSTREAM(FEET) =   395.50  DOWNSTREAM(FEET) =   352.00
 FLOW LENGTH(FEET) =   175.00   MANNING'S N =  0.013
 DEPTH OF FLOW IN  12.0 INCH PIPE IS   8.5 INCHES
 PIPE-FLOW VELOCITY(FEET/SEC.) =  24.09
 ESTIMATED PIPE DIAMETER(INCH) =  12.00    NUMBER OF PIPES =   1
 PIPE-FLOW(CFS) =     14.32
 PIPE TRAVEL TIME(MIN.) =   0.12    Tc(MIN.) =    5.52
 LONGEST FLOWPATH FROM NODE    185.00 TO NODE    100.00 =     800.00 FEET.

****************************************************************************
 FLOW PROCESS FROM NODE    100.00 TO NODE    100.00 IS CODE =   1
----------------------------------------------------------------------------
 >>>>>DESIGNATE INDEPENDENT STREAM FOR CONFLUENCE<<<<<
================================================================================
 TOTAL NUMBER OF STREAMS =  2
 CONFLUENCE VALUES USED FOR INDEPENDENT STREAM  1 ARE:
 TIME OF CONCENTRATION(MIN.) =    5.52
 RAINFALL INTENSITY(INCH/HR) =   7.91
 TOTAL STREAM AREA(ACRES) =     1.88
 PEAK FLOW RATE(CFS) AT CONFLUENCE =     14.32

****************************************************************************
 FLOW PROCESS FROM NODE    103.00 TO NODE    102.00 IS CODE =  21
----------------------------------------------------------------------------
 >>>>>RATIONAL METHOD INITIAL SUBAREA ANALYSIS<<<<<
================================================================================
 *USER SPECIFIED(SUBAREA):
 USER-SPECIFIED RUNOFF COEFFICIENT = .9500
 S.C.S. CURVE NUMBER (AMC II) =   0
 INITIAL SUBAREA FLOW-LENGTH(FEET) =    40.00
 UPSTREAM ELEVATION(FEET) =    415.20
 DOWNSTREAM ELEVATION(FEET) =    413.70
 ELEVATION DIFFERENCE(FEET) =      1.50
 SUBAREA OVERLAND TIME OF FLOW(MIN.) =    1.099
  100 YEAR RAINFALL INTENSITY(INCH/HOUR) =  8.431
 NOTE: RAINFALL INTENSITY IS BASED ON Tc = 5-MINUTE.
 SUBAREA RUNOFF(CFS) =      0.40
 TOTAL AREA(ACRES) =      0.05   TOTAL RUNOFF(CFS) =      0.40

****************************************************************************
 FLOW PROCESS FROM NODE    102.00 TO NODE    101.00 IS CODE =  62
----------------------------------------------------------------------------
 >>>>>COMPUTE STREET FLOW TRAVEL TIME THRU SUBAREA<<<<<
 >>>>>(STREET TABLE SECTION #  1 USED)<<<<<
================================================================================
```

```
 UPSTREAM ELEVATION(FEET) =  413.70  DOWNSTREAM ELEVATION(FEET) =  374.00
 STREET LENGTH(FEET) =   950.00   CURB HEIGHT(INCHES) =  6.0
 STREET HALFWIDTH(FEET) = 20.00

 DISTANCE FROM CROWN TO CROSSFALL GRADEBREAK(FEET) =  12.00
 INSIDE STREET CROSSFALL(DECIMAL) =  0.020
 OUTSIDE STREET CROSSFALL(DECIMAL)  =  0.020

 SPECIFIED NUMBER OF HALFSTREETS CARRYING RUNOFF =  1
 STREET PARKWAY CROSSFALL(DECIMAL)  =  0.020
 Manning's FRICTION FACTOR for Streetflow Section(curb-to-curb) =   0.0150
 Manning's FRICTION FACTOR for Back-of-Walk Flow Section =   0.0150

  **TRAVEL TIME COMPUTED USING ESTIMATED FLOW(CFS) =       9.97
  STREETFLOW MODEL RESULTS USING ESTIMATED FLOW:
  STREET FLOW DEPTH(FEET) =  0.39
  HALFSTREET FLOOD WIDTH(FEET) =   13.20
  AVERAGE FLOW VELOCITY(FEET/SEC.) =    5.36
  PRODUCT OF DEPTH&VELOCITY(FT*FT/SEC.) =    2.09
 STREET FLOW TRAVEL TIME(MIN.) =   2.96   Tc(MIN.) =    4.05
  100 YEAR RAINFALL INTENSITY(INCH/HOUR) =  8.431
 NOTE: RAINFALL INTENSITY IS BASED ON Tc = 5-MINUTE.
 *USER SPECIFIED(SUBAREA):
 USER-SPECIFIED RUNOFF COEFFICIENT = .9500
 S.C.S. CURVE NUMBER (AMC II) =   0
 AREA-AVERAGE RUNOFF COEFFICIENT =  0.950
 SUBAREA AREA(ACRES) =    2.39     SUBAREA RUNOFF(CFS) =   19.14
 TOTAL AREA(ACRES) =       2.4       PEAK FLOW RATE(CFS) =      19.54

 END OF SUBAREA STREET FLOW HYDRAULICS:
 DEPTH(FEET) = 0.47   HALFSTREET FLOOD WIDTH(FEET) =  17.23
 FLOW VELOCITY(FEET/SEC.) =  6.33   DEPTH*VELOCITY(FT*FT/SEC.) =   2.98
 LONGEST FLOWPATH FROM NODE    103.00 TO NODE    101.00 =     990.00 FEET.

****************************************************************************
 FLOW PROCESS FROM NODE    101.00 TO NODE    100.00 IS CODE =  31
----------------------------------------------------------------------------
 >>>>>COMPUTE PIPE-FLOW TRAVEL TIME THRU SUBAREA<<<<<
 >>>>>USING COMPUTER-ESTIMATED PIPESIZE (NON-PRESSURE FLOW)<<<<<
============================================================================
 ELEVATION DATA: UPSTREAM(FEET) =   371.00  DOWNSTREAM(FEET) =   352.00
 FLOW LENGTH(FEET) =   360.00   MANNING'S N =  0.013
 DEPTH OF FLOW IN  18.0 INCH PIPE IS  12.8 INCHES
 PIPE-FLOW VELOCITY(FEET/SEC.) =  14.55
 ESTIMATED PIPE DIAMETER(INCH) =  18.00    NUMBER OF PIPES =   1
 PIPE-FLOW(CFS) =      19.54
 PIPE TRAVEL TIME(MIN.) =   0.41    Tc(MIN.) =    4.47
 LONGEST FLOWPATH FROM NODE    103.00 TO NODE    100.00 =    1350.00 FEET.
```

```
****************************************************************************
 FLOW PROCESS FROM NODE    100.00 TO NODE    100.00 IS CODE =   1
----------------------------------------------------------------------------
 >>>>>DESIGNATE INDEPENDENT STREAM FOR CONFLUENCE<<<<<
 >>>>>AND COMPUTE VARIOUS CONFLUENCED STREAM VALUES<<<<<
============================================================================
 TOTAL NUMBER OF STREAMS =  2
 CONFLUENCE VALUES USED FOR INDEPENDENT STREAM  2 ARE:
 TIME OF CONCENTRATION(MIN.) =    4.47
 RAINFALL INTENSITY(INCH/HR) =   8.43
 TOTAL STREAM AREA(ACRES) =     2.44
 PEAK FLOW RATE(CFS) AT CONFLUENCE =     19.54

 ** CONFLUENCE DATA **
 STREAM     RUNOFF      Tc     INTENSITY     AREA
 NUMBER      (CFS)    (MIN.)   (INCH/HOUR)    (ACRE)
   1       14.32    5.52       7.906         1.88
   2       19.54    4.47       8.431         2.44

 RAINFALL INTENSITY AND TIME OF CONCENTRATION RATIO
 CONFLUENCE FORMULA USED FOR  2 STREAMS.

 ** PEAK FLOW RATE TABLE **
 STREAM     RUNOFF      Tc     INTENSITY
 NUMBER      (CFS)    (MIN.)   (INCH/HOUR)
   1       32.97    4.47       8.431
   2       32.65    5.52       7.906

 COMPUTED CONFLUENCE ESTIMATES ARE AS FOLLOWS:
 PEAK FLOW RATE(CFS) =     32.97   Tc(MIN.) =    4.47
 TOTAL AREA(ACRES) =       4.3
 LONGEST FLOWPATH FROM NODE    103.00 TO NODE    100.00 =    1350.00 FEET.

****************************************************************************
 FLOW PROCESS FROM NODE    100.00 TO NODE    100.00 IS CODE =  11
----------------------------------------------------------------------------
 >>>>>CONFLUENCE MEMORY BANK # 1 WITH THE MAIN-STREAM MEMORY<<<<<
============================================================================

 ** MAIN STREAM CONFLUENCE DATA **
 STREAM     RUNOFF      Tc     INTENSITY     AREA
 NUMBER      (CFS)    (MIN.)   (INCH/HOUR)   (ACRE)
   1       32.97    4.47       8.431         4.32
 LONGEST FLOWPATH FROM NODE    103.00 TO NODE    100.00 =    1350.00 FEET.

 ** MEMORY BANK #  1 CONFLUENCE DATA **
 STREAM     RUNOFF      Tc     INTENSITY     AREA
```

```
 NUMBER     (CFS)    (MIN.)   (INCH/HOUR)   (ACRE)
   1      43.24    5.43      7.993       5.48
 LONGEST FLOWPATH FROM NODE    155.00 TO NODE    100.00 =    1045.00 FEET.

 ** PEAK FLOW RATE TABLE **
 STREAM    RUNOFF      Tc     INTENSITY
 NUMBER     (CFS)    (MIN.)   (INCH/HOUR)
   1     68.53      4.47       8.431
   2     74.50      5.43       7.993

 COMPUTED CONFLUENCE ESTIMATES ARE AS FOLLOWS:
 PEAK FLOW RATE(CFS) =     74.50   Tc(MIN.) =    5.43
 TOTAL AREA(ACRES) =       9.8

****************************************************************************
 FLOW PROCESS FROM NODE    100.00 TO NODE    100.00 IS CODE =  12
----------------------------------------------------------------------------
 >>>>>CLEAR MEMORY BANK # 1 <<<<<
============================================================================

****************************************************************************
 FLOW PROCESS FROM NODE    100.00 TO NODE     99.00 IS CODE =  31
----------------------------------------------------------------------------
 >>>>>COMPUTE PIPE-FLOW TRAVEL TIME THRU SUBAREA<<<<<
 >>>>>USING COMPUTER-ESTIMATED PIPESIZE (NON-PRESSURE FLOW)<<<<<
============================================================================
 ELEVATION DATA: UPSTREAM(FEET) =   352.00  DOWNSTREAM(FEET) =   350.90
 FLOW LENGTH(FEET) =    40.00   MANNING'S N =  0.013
 DEPTH OF FLOW IN  33.0 INCH PIPE IS  24.4 INCHES
 PIPE-FLOW VELOCITY(FEET/SEC.) =  15.84
 ESTIMATED PIPE DIAMETER(INCH) =  33.00    NUMBER OF PIPES =   1
 PIPE-FLOW(CFS) =      74.50
 PIPE TRAVEL TIME(MIN.) =   0.04    Tc(MIN.) =    5.47
 LONGEST FLOWPATH FROM NODE    103.00 TO NODE     99.00 =    1390.00 FEET.

****************************************************************************
 FLOW PROCESS FROM NODE     99.00 TO NODE     99.00 IS CODE =  81
----------------------------------------------------------------------------
 >>>>>ADDITION OF SUBAREA TO MAINLINE PEAK FLOW<<<<<
============================================================================
  100 YEAR RAINFALL INTENSITY(INCH/HOUR) =  7.953
 *USER SPECIFIED(SUBAREA):
 USER-SPECIFIED RUNOFF COEFFICIENT = .9500
 S.C.S. CURVE NUMBER (AMC II) =   0
 AREA-AVERAGE RUNOFF COEFFICIENT = 0.9500
 SUBAREA AREA(ACRES) =    1.18   SUBAREA RUNOFF(CFS) =    8.92
 TOTAL AREA(ACRES) =      11.0   TOTAL RUNOFF(CFS) =      82.96
 TC(MIN.) =    5.47
```

```
****************************************************************************
 FLOW PROCESS FROM NODE     99.00 TO NODE     99.00 IS CODE =  10
----------------------------------------------------------------------------
 >>>>>MAIN-STREAM MEMORY COPIED ONTO MEMORY BANK # 1 <<<<<
============================================================================

****************************************************************************
 FLOW PROCESS FROM NODE    230.00 TO NODE    225.00 IS CODE =  21
----------------------------------------------------------------------------
 >>>>>RATIONAL METHOD INITIAL SUBAREA ANALYSIS<<<<<
============================================================================
 *USER SPECIFIED(SUBAREA):
 USER-SPECIFIED RUNOFF COEFFICIENT = .9500
 S.C.S. CURVE NUMBER (AMC II) =  0
 INITIAL SUBAREA FLOW-LENGTH(FEET) =    50.00
 UPSTREAM ELEVATION(FEET) =    378.00
 DOWNSTREAM ELEVATION(FEET) =    377.10
 ELEVATION DIFFERENCE(FEET) =      0.90
 SUBAREA OVERLAND TIME OF FLOW(MIN.) =    1.570
  100 YEAR RAINFALL INTENSITY(INCH/HOUR) =  8.431
 NOTE: RAINFALL INTENSITY IS BASED ON Tc = 5-MINUTE.
 SUBAREA RUNOFF(CFS) =      0.24
 TOTAL AREA(ACRES) =      0.03   TOTAL RUNOFF(CFS) =      0.24

****************************************************************************
 FLOW PROCESS FROM NODE    225.00 TO NODE    220.00 IS CODE =  62
----------------------------------------------------------------------------
 >>>>>COMPUTE STREET FLOW TRAVEL TIME THRU SUBAREA<<<<<
 >>>>>(STREET TABLE SECTION #  1 USED)<<<<<
============================================================================
 UPSTREAM ELEVATION(FEET) =  377.10  DOWNSTREAM ELEVATION(FEET) =  369.70
 STREET LENGTH(FEET) =   310.00   CURB HEIGHT(INCHES) =  6.0
 STREET HALFWIDTH(FEET) = 20.00

 DISTANCE FROM CROWN TO CROSSFALL GRADEBREAK(FEET) =  12.00
 INSIDE STREET CROSSFALL(DECIMAL) =  0.020
 OUTSIDE STREET CROSSFALL(DECIMAL)  =  0.020

 SPECIFIED NUMBER OF HALFSTREETS CARRYING RUNOFF =  2
 STREET PARKWAY CROSSFALL(DECIMAL)  =  0.020
 Manning's FRICTION FACTOR for Streetflow Section(curb-to-curb) =   0.0150
 Manning's FRICTION FACTOR for Back-of-Walk Flow Section =   0.0150

  **TRAVEL TIME COMPUTED USING ESTIMATED FLOW(CFS) =       5.29
  STREETFLOW MODEL RESULTS USING ESTIMATED FLOW:
  STREET FLOW DEPTH(FEET) =  0.29
  HALFSTREET FLOOD WIDTH(FEET) =    8.42
```

```
  AVERAGE FLOW VELOCITY(FEET/SEC.) =    3.19
  PRODUCT OF DEPTH&VELOCITY(FT*FT/SEC.) =    0.94
 STREET FLOW TRAVEL TIME(MIN.) =   1.62   Tc(MIN.) =    3.19
  100 YEAR RAINFALL INTENSITY(INCH/HOUR) =  8.431
 NOTE: RAINFALL INTENSITY IS BASED ON Tc = 5-MINUTE.
 *USER SPECIFIED(SUBAREA):
 USER-SPECIFIED RUNOFF COEFFICIENT = .9500
 S.C.S. CURVE NUMBER (AMC II) =   0
 AREA-AVERAGE RUNOFF COEFFICIENT =  0.950
 SUBAREA AREA(ACRES) =    1.26     SUBAREA RUNOFF(CFS) =   10.09
 TOTAL AREA(ACRES) =       1.3       PEAK FLOW RATE(CFS) =     10.33

 END OF SUBAREA STREET FLOW HYDRAULICS:
 DEPTH(FEET) = 0.35   HALFSTREET FLOOD WIDTH(FEET) =  11.33
 FLOW VELOCITY(FEET/SEC.) =  3.69   DEPTH*VELOCITY(FT*FT/SEC.) =   1.30
 LONGEST FLOWPATH FROM NODE    230.00 TO NODE    220.00 =     360.00 FEET.

****************************************************************************
 FLOW PROCESS FROM NODE    220.00 TO NODE    220.00 IS CODE =   1
----------------------------------------------------------------------------
 >>>>>DESIGNATE INDEPENDENT STREAM FOR CONFLUENCE<<<<<
============================================================================
 TOTAL NUMBER OF STREAMS =  2
 CONFLUENCE VALUES USED FOR INDEPENDENT STREAM  1 ARE:
 TIME OF CONCENTRATION(MIN.) =    3.19
 RAINFALL INTENSITY(INCH/HR) =   8.43
 TOTAL STREAM AREA(ACRES) =     1.29
 PEAK FLOW RATE(CFS) AT CONFLUENCE =     10.33

****************************************************************************
 FLOW PROCESS FROM NODE    250.00 TO NODE    250.00 IS CODE =  21
----------------------------------------------------------------------------
 >>>>>RATIONAL METHOD INITIAL SUBAREA ANALYSIS<<<<<
============================================================================
 *USER SPECIFIED(SUBAREA):
 USER-SPECIFIED RUNOFF COEFFICIENT = .9500
 S.C.S. CURVE NUMBER (AMC II) =   0
 INITIAL SUBAREA FLOW-LENGTH(FEET) =    60.00
 UPSTREAM ELEVATION(FEET) =    374.10
 DOWNSTREAM ELEVATION(FEET) =    373.40
 ELEVATION DIFFERENCE(FEET) =      0.70
 SUBAREA OVERLAND TIME OF FLOW(MIN.) =    1.987
  100 YEAR RAINFALL INTENSITY(INCH/HOUR) =  8.431
 NOTE: RAINFALL INTENSITY IS BASED ON Tc = 5-MINUTE.
 SUBAREA RUNOFF(CFS) =      0.64
 TOTAL AREA(ACRES) =      0.08   TOTAL RUNOFF(CFS) =      0.64

****************************************************************************
```

```
 FLOW PROCESS FROM NODE    250.00 TO NODE    220.00 IS CODE =  31
----------------------------------------------------------------------------
 >>>>>COMPUTE PIPE-FLOW TRAVEL TIME THRU SUBAREA<<<<<
 >>>>>USING COMPUTER-ESTIMATED PIPESIZE (NON-PRESSURE FLOW)<<<<<
============================================================================
 ELEVATION DATA: UPSTREAM(FEET) =   370.00  DOWNSTREAM(FEET) =   361.30
 FLOW LENGTH(FEET) =   170.00   MANNING'S N =  0.013
 ESTIMATED PIPE DIAMETER(INCH) INCREASED TO  8.000
 DEPTH OF FLOW IN   8.0 INCH PIPE IS   2.7 INCHES
 PIPE-FLOW VELOCITY(FEET/SEC.) =   6.15
 ESTIMATED PIPE DIAMETER(INCH) =   8.00    NUMBER OF PIPES =   1
 PIPE-FLOW(CFS) =       0.64
 PIPE TRAVEL TIME(MIN.) =   0.46    Tc(MIN.) =    2.45
 LONGEST FLOWPATH FROM NODE    250.00 TO NODE    220.00 =     230.00 FEET.

****************************************************************************
 FLOW PROCESS FROM NODE    220.00 TO NODE    220.00 IS CODE =   1
----------------------------------------------------------------------------
 >>>>>DESIGNATE INDEPENDENT STREAM FOR CONFLUENCE<<<<<
 >>>>>AND COMPUTE VARIOUS CONFLUENCED STREAM VALUES<<<<<
============================================================================
 TOTAL NUMBER OF STREAMS =  2
 CONFLUENCE VALUES USED FOR INDEPENDENT STREAM  2 ARE:
 TIME OF CONCENTRATION(MIN.) =    2.45
 RAINFALL INTENSITY(INCH/HR) =   8.43
 TOTAL STREAM AREA(ACRES) =     0.08
 PEAK FLOW RATE(CFS) AT CONFLUENCE =      0.64

 ** CONFLUENCE DATA **
 STREAM     RUNOFF      Tc     INTENSITY     AREA
 NUMBER      (CFS)    (MIN.)   (INCH/HOUR)    (ACRE)
    1       10.33     3.19       8.431         1.29
    2        0.64     2.45       8.431         0.08

 RAINFALL INTENSITY AND TIME OF CONCENTRATION RATIO
 CONFLUENCE FORMULA USED FOR  2 STREAMS.

 ** PEAK FLOW RATE TABLE **
 STREAM     RUNOFF      Tc     INTENSITY
 NUMBER      (CFS)    (MIN.)   (INCH/HOUR)
    1        8.58     2.45       8.431
    2       10.97     3.19       8.431

 COMPUTED CONFLUENCE ESTIMATES ARE AS FOLLOWS:
 PEAK FLOW RATE(CFS) =     10.97   Tc(MIN.) =    3.19
 TOTAL AREA(ACRES) =       1.4
 LONGEST FLOWPATH FROM NODE    230.00 TO NODE    220.00 =     360.00 FEET.
```

```
****************************************************************************
 FLOW PROCESS FROM NODE    220.00 TO NODE    215.00 IS CODE =  31
----------------------------------------------------------------------------
 >>>>>COMPUTE PIPE-FLOW TRAVEL TIME THRU SUBAREA<<<<<
 >>>>>USING COMPUTER-ESTIMATED PIPESIZE (NON-PRESSURE FLOW)<<<<<
============================================================================
 ELEVATION DATA: UPSTREAM(FEET) =   361.30  DOWNSTREAM(FEET) =   353.90
 FLOW LENGTH(FEET) =   120.00   MANNING'S N =  0.013
 DEPTH OF FLOW IN  15.0 INCH PIPE IS   9.4 INCHES
 PIPE-FLOW VELOCITY(FEET/SEC.) =  13.50
 ESTIMATED PIPE DIAMETER(INCH) =  15.00    NUMBER OF PIPES =   1
 PIPE-FLOW(CFS) =      10.97
 PIPE TRAVEL TIME(MIN.) =   0.15    Tc(MIN.) =    3.34
 LONGEST FLOWPATH FROM NODE    230.00 TO NODE    215.00 =     480.00 FEET.

****************************************************************************
 FLOW PROCESS FROM NODE    215.00 TO NODE    215.00 IS CODE =  10
----------------------------------------------------------------------------
 >>>>>MAIN-STREAM MEMORY COPIED ONTO MEMORY BANK # 2 <<<<<
============================================================================

****************************************************************************
 FLOW PROCESS FROM NODE    245.00 TO NODE    240.00 IS CODE =  21
----------------------------------------------------------------------------
 >>>>>RATIONAL METHOD INITIAL SUBAREA ANALYSIS<<<<<
============================================================================
 *USER SPECIFIED(SUBAREA):
 USER-SPECIFIED RUNOFF COEFFICIENT = .9500
 S.C.S. CURVE NUMBER (AMC II) =   0
 INITIAL SUBAREA FLOW-LENGTH(FEET) =    75.00
 UPSTREAM ELEVATION(FEET) =    372.50
 DOWNSTREAM ELEVATION(FEET) =    370.80
 ELEVATION DIFFERENCE(FEET) =      1.70
 SUBAREA OVERLAND TIME OF FLOW(MIN.) =    1.780
  100 YEAR RAINFALL INTENSITY(INCH/HOUR) =  8.431
 NOTE: RAINFALL INTENSITY IS BASED ON Tc = 5-MINUTE.
 SUBAREA RUNOFF(CFS) =      0.40
 TOTAL AREA(ACRES) =      0.05   TOTAL RUNOFF(CFS) =      0.40

****************************************************************************
 FLOW PROCESS FROM NODE    240.00 TO NODE    235.00 IS CODE =  62
----------------------------------------------------------------------------
 >>>>>COMPUTE STREET FLOW TRAVEL TIME THRU SUBAREA<<<<<
 >>>>>(STREET TABLE SECTION #  1 USED)<<<<<
============================================================================
 UPSTREAM ELEVATION(FEET) =  370.80  DOWNSTREAM ELEVATION(FEET) =  365.80
 STREET LENGTH(FEET) =   215.00   CURB HEIGHT(INCHES) =  6.0
 STREET HALFWIDTH(FEET) = 20.00
```

```
 DISTANCE FROM CROWN TO CROSSFALL GRADEBREAK(FEET) =  12.00
 INSIDE STREET CROSSFALL(DECIMAL) =  0.020
 OUTSIDE STREET CROSSFALL(DECIMAL)  =  0.020

 SPECIFIED NUMBER OF HALFSTREETS CARRYING RUNOFF =  1
 STREET PARKWAY CROSSFALL(DECIMAL)  =  0.020
 Manning's FRICTION FACTOR for Streetflow Section(curb-to-curb) =   0.0150
 Manning's FRICTION FACTOR for Back-of-Walk Flow Section =   0.0150

  **TRAVEL TIME COMPUTED USING ESTIMATED FLOW(CFS) =       1.60
  STREETFLOW MODEL RESULTS USING ESTIMATED FLOW:
  STREET FLOW DEPTH(FEET) =  0.26
  HALFSTREET FLOOD WIDTH(FEET) =    6.71
  AVERAGE FLOW VELOCITY(FEET/SEC.) =    2.82
  PRODUCT OF DEPTH&VELOCITY(FT*FT/SEC.) =    0.73
 STREET FLOW TRAVEL TIME(MIN.) =   1.27   Tc(MIN.) =    3.05
  100 YEAR RAINFALL INTENSITY(INCH/HOUR) =  8.431
 NOTE: RAINFALL INTENSITY IS BASED ON Tc = 5-MINUTE.
 *USER SPECIFIED(SUBAREA):
 USER-SPECIFIED RUNOFF COEFFICIENT = .9500
 S.C.S. CURVE NUMBER (AMC II) =   0
 AREA-AVERAGE RUNOFF COEFFICIENT =  0.950
 SUBAREA AREA(ACRES) =    0.30     SUBAREA RUNOFF(CFS) =    2.40
 TOTAL AREA(ACRES) =       0.4       PEAK FLOW RATE(CFS) =       2.80

 END OF SUBAREA STREET FLOW HYDRAULICS:
 DEPTH(FEET) = 0.30   HALFSTREET FLOOD WIDTH(FEET) =   8.70
 FLOW VELOCITY(FEET/SEC.) =  3.20   DEPTH*VELOCITY(FT*FT/SEC.) =   0.96
 LONGEST FLOWPATH FROM NODE    245.00 TO NODE    235.00 =     290.00 FEET.

****************************************************************************
 FLOW PROCESS FROM NODE    235.00 TO NODE    205.00 IS CODE =  31
----------------------------------------------------------------------------
 >>>>>COMPUTE PIPE-FLOW TRAVEL TIME THRU SUBAREA<<<<<
 >>>>>USING COMPUTER-ESTIMATED PIPESIZE (NON-PRESSURE FLOW)<<<<<
============================================================================
 ELEVATION DATA: UPSTREAM(FEET) =   363.00  DOWNSTREAM(FEET) =   361.70
 FLOW LENGTH(FEET) =   120.00   MANNING'S N =  0.013
 DEPTH OF FLOW IN  12.0 INCH PIPE IS   8.1 INCHES
 PIPE-FLOW VELOCITY(FEET/SEC.) =   4.97
 ESTIMATED PIPE DIAMETER(INCH) =  12.00    NUMBER OF PIPES =   1
 PIPE-FLOW(CFS) =       2.80
 PIPE TRAVEL TIME(MIN.) =   0.40    Tc(MIN.) =    3.45
 LONGEST FLOWPATH FROM NODE    245.00 TO NODE    205.00 =     410.00 FEET.

****************************************************************************
 FLOW PROCESS FROM NODE    205.00 TO NODE    205.00 IS CODE =   1
```

```
----------------------------------------------------------------------------
 >>>>>DESIGNATE INDEPENDENT STREAM FOR CONFLUENCE<<<<<
============================================================================
 TOTAL NUMBER OF STREAMS =  2
 CONFLUENCE VALUES USED FOR INDEPENDENT STREAM  1 ARE:
 TIME OF CONCENTRATION(MIN.) =    3.45
 RAINFALL INTENSITY(INCH/HR) =   8.43
 TOTAL STREAM AREA(ACRES) =     0.35
 PEAK FLOW RATE(CFS) AT CONFLUENCE =      2.80

****************************************************************************
 FLOW PROCESS FROM NODE    255.00 TO NODE    250.00 IS CODE =  21
----------------------------------------------------------------------------
 >>>>>RATIONAL METHOD INITIAL SUBAREA ANALYSIS<<<<<
============================================================================
 *USER SPECIFIED(SUBAREA):
 USER-SPECIFIED RUNOFF COEFFICIENT = .9500
 S.C.S. CURVE NUMBER (AMC II) =   0
 INITIAL SUBAREA FLOW-LENGTH(FEET) =    75.00
 UPSTREAM ELEVATION(FEET) =    373.50
 DOWNSTREAM ELEVATION(FEET) =    371.60
 ELEVATION DIFFERENCE(FEET) =      1.90
 SUBAREA OVERLAND TIME OF FLOW(MIN.) =    1.715
  100 YEAR RAINFALL INTENSITY(INCH/HOUR) =  8.431
 NOTE: RAINFALL INTENSITY IS BASED ON Tc = 5-MINUTE.
 SUBAREA RUNOFF(CFS) =      0.40
 TOTAL AREA(ACRES) =      0.05   TOTAL RUNOFF(CFS) =      0.40

****************************************************************************
 FLOW PROCESS FROM NODE    250.00 TO NODE    210.00 IS CODE =  62
----------------------------------------------------------------------------
 >>>>>COMPUTE STREET FLOW TRAVEL TIME THRU SUBAREA<<<<<
 >>>>>(STREET TABLE SECTION #  1 USED)<<<<<
============================================================================
 UPSTREAM ELEVATION(FEET) =  371.60  DOWNSTREAM ELEVATION(FEET) =  364.00
 STREET LENGTH(FEET) =   175.00   CURB HEIGHT(INCHES) =  6.0
 STREET HALFWIDTH(FEET) = 20.00

 DISTANCE FROM CROWN TO CROSSFALL GRADEBREAK(FEET) =  12.00
 INSIDE STREET CROSSFALL(DECIMAL) =  0.020
 OUTSIDE STREET CROSSFALL(DECIMAL)  =  0.020

 SPECIFIED NUMBER OF HALFSTREETS CARRYING RUNOFF =  2
 STREET PARKWAY CROSSFALL(DECIMAL)  =  0.020
 Manning's FRICTION FACTOR for Streetflow Section(curb-to-curb) =   0.0150
 Manning's FRICTION FACTOR for Back-of-Walk Flow Section =   0.0150

  **TRAVEL TIME COMPUTED USING ESTIMATED FLOW(CFS) =       3.12
```

```
 STREETFLOW MODEL RESULTS USING ESTIMATED FLOW:
 STREET FLOW DEPTH(FEET) =  0.24
 HALFSTREET FLOOD WIDTH(FEET) =    5.59
 AVERAGE FLOW VELOCITY(FEET/SEC.) =    3.63
 PRODUCT OF DEPTH&VELOCITY(FT*FT/SEC.) =    0.86
STREET FLOW TRAVEL TIME(MIN.) =   0.80   Tc(MIN.) =    2.52
 100 YEAR RAINFALL INTENSITY(INCH/HOUR) =  8.431
NOTE: RAINFALL INTENSITY IS BASED ON Tc = 5-MINUTE.
*USER SPECIFIED(SUBAREA):
USER-SPECIFIED RUNOFF COEFFICIENT = .9500
S.C.S. CURVE NUMBER (AMC II) =   0
AREA-AVERAGE RUNOFF COEFFICIENT =  0.950
SUBAREA AREA(ACRES) =    0.68     SUBAREA RUNOFF(CFS) =    5.45
TOTAL AREA(ACRES) =       0.7       PEAK FLOW RATE(CFS) =       5.85

END OF SUBAREA STREET FLOW HYDRAULICS:
DEPTH(FEET) = 0.28   HALFSTREET FLOOD WIDTH(FEET) =   7.72
FLOW VELOCITY(FEET/SEC.) =  4.09   DEPTH*VELOCITY(FT*FT/SEC.) =   1.15
LONGEST FLOWPATH FROM NODE    255.00 TO NODE    210.00 =     250.00 FEET.

****************************************************************************
 FLOW PROCESS FROM NODE    210.00 TO NODE    205.00 IS CODE =  31
----------------------------------------------------------------------------
 >>>>>COMPUTE PIPE-FLOW TRAVEL TIME THRU SUBAREA<<<<<
 >>>>>USING COMPUTER-ESTIMATED PIPESIZE (NON-PRESSURE FLOW)<<<<<
============================================================================
 ELEVATION DATA: UPSTREAM(FEET) =   362.30  DOWNSTREAM(FEET) =   361.80
 FLOW LENGTH(FEET) =    55.00   MANNING'S N =  0.013
 DEPTH OF FLOW IN  18.0 INCH PIPE IS  10.2 INCHES
 PIPE-FLOW VELOCITY(FEET/SEC.) =   5.65
 ESTIMATED PIPE DIAMETER(INCH) =  18.00    NUMBER OF PIPES =   1
 PIPE-FLOW(CFS) =       5.85
 PIPE TRAVEL TIME(MIN.) =   0.16    Tc(MIN.) =    2.68
 LONGEST FLOWPATH FROM NODE    255.00 TO NODE    205.00 =     305.00 FEET.

****************************************************************************
 FLOW PROCESS FROM NODE    205.00 TO NODE    205.00 IS CODE =   1
----------------------------------------------------------------------------
 >>>>>DESIGNATE INDEPENDENT STREAM FOR CONFLUENCE<<<<<
 >>>>>AND COMPUTE VARIOUS CONFLUENCED STREAM VALUES<<<<<
============================================================================
 TOTAL NUMBER OF STREAMS =  2
 CONFLUENCE VALUES USED FOR INDEPENDENT STREAM  2 ARE:
 TIME OF CONCENTRATION(MIN.) =    2.68
 RAINFALL INTENSITY(INCH/HR) =   8.43
 TOTAL STREAM AREA(ACRES) =     0.73
 PEAK FLOW RATE(CFS) AT CONFLUENCE =      5.85
```

```
 ** CONFLUENCE DATA **
 STREAM     RUNOFF      Tc     INTENSITY     AREA
 NUMBER      (CFS)    (MIN.)  (INCH/HOUR)   (ACRE)
   1        2.80     3.45       8.431        0.35
   2        5.85     2.68       8.431        0.73

 RAINFALL INTENSITY AND TIME OF CONCENTRATION RATIO
 CONFLUENCE FORMULA USED FOR  2 STREAMS.

 ** PEAK FLOW RATE TABLE **
 STREAM     RUNOFF      Tc     INTENSITY
 NUMBER      (CFS)    (MIN.)  (INCH/HOUR)
   1        8.02     2.68       8.431
   2        8.65     3.45       8.431

 COMPUTED CONFLUENCE ESTIMATES ARE AS FOLLOWS:
 PEAK FLOW RATE(CFS) =       8.65   Tc(MIN.) =    3.45
 TOTAL AREA(ACRES) =        1.1
 LONGEST FLOWPATH FROM NODE    245.00 TO NODE    205.00 =     410.00 FEET.

****************************************************************************
 FLOW PROCESS FROM NODE    205.00 TO NODE    215.00 IS CODE =  31
----------------------------------------------------------------------------
 >>>>>COMPUTE PIPE-FLOW TRAVEL TIME THRU SUBAREA<<<<<
 >>>>>USING COMPUTER-ESTIMATED PIPESIZE (NON-PRESSURE FLOW)<<<<<
============================================================================
 ELEVATION DATA: UPSTREAM(FEET) =   361.80  DOWNSTREAM(FEET) =   353.90
 FLOW LENGTH(FEET) =    55.00   MANNING'S N =  0.013
 DEPTH OF FLOW IN  12.0 INCH PIPE IS   7.2 INCHES
 PIPE-FLOW VELOCITY(FEET/SEC.) =  17.51
 ESTIMATED PIPE DIAMETER(INCH) =  12.00    NUMBER OF PIPES =   1
 PIPE-FLOW(CFS) =       8.65
 PIPE TRAVEL TIME(MIN.) =   0.05    Tc(MIN.) =    3.50
 LONGEST FLOWPATH FROM NODE    245.00 TO NODE    215.00 =     465.00 FEET.

****************************************************************************
 FLOW PROCESS FROM NODE    215.00 TO NODE    215.00 IS CODE =  10
----------------------------------------------------------------------------
 >>>>>MAIN-STREAM MEMORY COPIED ONTO MEMORY BANK # 2 <<<<<
============================================================================
 ***MEMORY BANK #  2 IS FULL. THEREFORE, MAIN-STREAM MEMORY
    DATA CAN NOT BE COPIED ONTO IT - PROCESS IGNORED.***

****************************************************************************
 FLOW PROCESS FROM NODE    215.00 TO NODE    200.00 IS CODE =  31
----------------------------------------------------------------------------
 >>>>>COMPUTE PIPE-FLOW TRAVEL TIME THRU SUBAREA<<<<<
 >>>>>USING COMPUTER-ESTIMATED PIPESIZE (NON-PRESSURE FLOW)<<<<<
```

```
==========================================================================
 ELEVATION DATA: UPSTREAM(FEET) =   353.90  DOWNSTREAM(FEET) =   346.00
 FLOW LENGTH(FEET) =   430.00   MANNING'S N =  0.013
 DEPTH OF FLOW IN  18.0 INCH PIPE IS  10.5 INCHES
 PIPE-FLOW VELOCITY(FEET/SEC.) =   8.11
 ESTIMATED PIPE DIAMETER(INCH) =  18.00    NUMBER OF PIPES =   1
 PIPE-FLOW(CFS) =       8.65
 PIPE TRAVEL TIME(MIN.) =   0.88    Tc(MIN.) =    4.39
 LONGEST FLOWPATH FROM NODE    245.00 TO NODE    200.00 =     895.00 FEET.

****************************************************************************
 FLOW PROCESS FROM NODE    230.00 TO NODE    230.00 IS CODE =  81
----------------------------------------------------------------------------
 >>>>>ADDITION OF SUBAREA TO MAINLINE PEAK FLOW<<<<<
==========================================================================
  100 YEAR RAINFALL INTENSITY(INCH/HOUR) =  8.431
 NOTE: RAINFALL INTENSITY IS BASED ON Tc = 5-MINUTE.
 *USER SPECIFIED(SUBAREA):
 USER-SPECIFIED RUNOFF COEFFICIENT = .9500
 S.C.S. CURVE NUMBER (AMC II) =   0
 AREA-AVERAGE RUNOFF COEFFICIENT = 0.9500
 SUBAREA AREA(ACRES) =    2.06   SUBAREA RUNOFF(CFS) =   16.50
 TOTAL AREA(ACRES) =       3.1   TOTAL RUNOFF(CFS) =      25.15
 TC(MIN.) =    4.39

****************************************************************************
 FLOW PROCESS FROM NODE    230.00 TO NODE    200.00 IS CODE =  31
----------------------------------------------------------------------------
 >>>>>COMPUTE PIPE-FLOW TRAVEL TIME THRU SUBAREA<<<<<
 >>>>>USING COMPUTER-ESTIMATED PIPESIZE (NON-PRESSURE FLOW)<<<<<
==========================================================================
 ELEVATION DATA: UPSTREAM(FEET) =   372.00  DOWNSTREAM(FEET) =   346.00
 FLOW LENGTH(FEET) =   485.00   MANNING'S N =  0.013
 DEPTH OF FLOW IN  21.0 INCH PIPE IS  13.2 INCHES
 PIPE-FLOW VELOCITY(FEET/SEC.) =  15.76
 ESTIMATED PIPE DIAMETER(INCH) =  21.00    NUMBER OF PIPES =   1
 PIPE-FLOW(CFS) =      25.15
 PIPE TRAVEL TIME(MIN.) =   0.51    Tc(MIN.) =    4.90
 LONGEST FLOWPATH FROM NODE    245.00 TO NODE    200.00 =    1380.00 FEET.

****************************************************************************
 FLOW PROCESS FROM NODE    200.00 TO NODE    200.00 IS CODE =  81
----------------------------------------------------------------------------
 >>>>>ADDITION OF SUBAREA TO MAINLINE PEAK FLOW<<<<<
==========================================================================
  100 YEAR RAINFALL INTENSITY(INCH/HOUR) =  8.431
 NOTE: RAINFALL INTENSITY IS BASED ON Tc = 5-MINUTE.
 *USER SPECIFIED(SUBAREA):
```

```
 USER-SPECIFIED RUNOFF COEFFICIENT = .9500
 S.C.S. CURVE NUMBER (AMC II) =  0
 AREA-AVERAGE RUNOFF COEFFICIENT = 0.9500
 SUBAREA AREA(ACRES) =    1.89   SUBAREA RUNOFF(CFS) =   15.14
 TOTAL AREA(ACRES) =       5.0   TOTAL RUNOFF(CFS) =     40.29
 TC(MIN.) =    4.90

****************************************************************************
 FLOW PROCESS FROM NODE    200.00 TO NODE    200.00 IS CODE =  11
----------------------------------------------------------------------------
 >>>>>CONFLUENCE MEMORY BANK # 2 WITH THE MAIN-STREAM MEMORY<<<<<
============================================================================

 ** MAIN STREAM CONFLUENCE DATA **
 STREAM     RUNOFF      Tc      INTENSITY     AREA
 NUMBER      (CFS)    (MIN.)   (INCH/HOUR)   (ACRE)
   1       40.29     4.90       8.431        5.03
 LONGEST FLOWPATH FROM NODE    245.00 TO NODE    200.00 =    1380.00 FEET.

 ** MEMORY BANK #  2 CONFLUENCE DATA **
 STREAM     RUNOFF      Tc      INTENSITY     AREA
 NUMBER      (CFS)    (MIN.)   (INCH/HOUR)   (ACRE)
   1       10.97     3.34       8.431        1.37
 LONGEST FLOWPATH FROM NODE    230.00 TO NODE    200.00 =     480.00 FEET.

 ** PEAK FLOW RATE TABLE **
 STREAM    RUNOFF      Tc      INTENSITY
 NUMBER     (CFS)     (MIN.)   (INCH/HOUR)
   1      38.39       3.34       8.431
   2      51.26       4.90       8.431

 COMPUTED CONFLUENCE ESTIMATES ARE AS FOLLOWS:
 PEAK FLOW RATE(CFS) =     51.26   Tc(MIN.) =    4.90
 TOTAL AREA(ACRES) =       6.4

****************************************************************************
 FLOW PROCESS FROM NODE    310.00 TO NODE    305.00 IS CODE =  21
----------------------------------------------------------------------------
 >>>>>RATIONAL METHOD INITIAL SUBAREA ANALYSIS<<<<<
============================================================================
 *USER SPECIFIED(SUBAREA):
 USER-SPECIFIED RUNOFF COEFFICIENT = .9500
 S.C.S. CURVE NUMBER (AMC II) =  0
 INITIAL SUBAREA FLOW-LENGTH(FEET) =    60.00
 UPSTREAM ELEVATION(FEET) =    372.00
 DOWNSTREAM ELEVATION(FEET) =    370.80
 ELEVATION DIFFERENCE(FEET) =      1.20
 SUBAREA OVERLAND TIME OF FLOW(MIN.) =    1.660
```

```
 100 YEAR RAINFALL INTENSITY(INCH/HOUR) =  8.431
 NOTE: RAINFALL INTENSITY IS BASED ON Tc = 5-MINUTE.
 SUBAREA RUNOFF(CFS) =     0.56
 TOTAL AREA(ACRES) =     0.07   TOTAL RUNOFF(CFS) =     0.56

****************************************************************************
 FLOW PROCESS FROM NODE    310.00 TO NODE    300.00 IS CODE =  31
----------------------------------------------------------------------------
 >>>>>COMPUTE PIPE-FLOW TRAVEL TIME THRU SUBAREA<<<<<
 >>>>>USING COMPUTER-ESTIMATED PIPESIZE (NON-PRESSURE FLOW)<<<<<
============================================================================
 ELEVATION DATA: UPSTREAM(FEET) =   369.30  DOWNSTREAM(FEET) =   364.80
 FLOW LENGTH(FEET) =   740.00   MANNING'S N =  0.013
 DEPTH OF FLOW IN   9.0 INCH PIPE IS   4.3 INCHES
 PIPE-FLOW VELOCITY(FEET/SEC.) =   2.71
 ESTIMATED PIPE DIAMETER(INCH) =   9.00    NUMBER OF PIPES =   1
 PIPE-FLOW(CFS) =      0.56
 PIPE TRAVEL TIME(MIN.) =   4.55    Tc(MIN.) =    6.21
 LONGEST FLOWPATH FROM NODE    310.00 TO NODE    300.00 =     800.00 FEET.

****************************************************************************
 FLOW PROCESS FROM NODE    300.00 TO NODE    300.00 IS CODE =  81
----------------------------------------------------------------------------
 >>>>>ADDITION OF SUBAREA TO MAINLINE PEAK FLOW<<<<<
============================================================================
  100 YEAR RAINFALL INTENSITY(INCH/HOUR) =  7.329
 *USER SPECIFIED(SUBAREA):
 USER-SPECIFIED RUNOFF COEFFICIENT = .9500
 S.C.S. CURVE NUMBER (AMC II) =   0
 AREA-AVERAGE RUNOFF COEFFICIENT = 0.9500
 SUBAREA AREA(ACRES) =    1.93   SUBAREA RUNOFF(CFS) =   13.44
 TOTAL AREA(ACRES) =       2.0   TOTAL RUNOFF(CFS) =     13.92
 TC(MIN.) =    6.21

****************************************************************************
 FLOW PROCESS FROM NODE    300.00 TO NODE    300.00 IS CODE =  10
----------------------------------------------------------------------------
 >>>>>MAIN-STREAM MEMORY COPIED ONTO MEMORY BANK # 3 <<<<<
============================================================================
============================================================================
 END OF STUDY SUMMARY:
 TOTAL AREA(ACRES)    =       2.0  TC(MIN.) =     6.21
 PEAK FLOW RATE(CFS)  =     13.92
============================================================================
============================================================================
 END OF RATIONAL METHOD ANALYSIS
```

# APPENDIX 6

# AS-BUILT REFERENCES

## GENERAL NOTES

1. DATUM: CITY OF ESCONDIDO BENCHMARK NO. 468 - RAILROAD SPIKE IN NORTH SIDE OF POWER POLE NO. 518954 AT S.W. CORNER OF CUL DE SAC AT SOUTH END OF EL KU AVENUE, 4 FEET SOUTH OF S.E. CORNER OF FENCE FOR PUMP STATION NO. 1. ELEVATION = 397.06.
2. BASIS OF JOB COORDINATES: THE INTERSECTION OF THE EAST R/W LINE OF ESCONDIDO FREEWAY AND THE NORTH R/W LINE OF VIA RANCHO PARKWAY, ASSUMED NORTH 29,447.290, EAST 49,370.110.
3. BASIS OF JOB BEARINGS: THE EAST R/W LINE OF ESCONDIDO FREEWAY FROM THE NORTH R/W LINE OF VIA RANCHO PARKWAY IS ASSUMED TO BEAR NORTH 44°14'51" EAST.
4. ALL DISTANCES AND DATA SHALL BE CHECKED BY THE CONTRACTOR PRIOR TO THE START OF CONSTRUCTION. IN CASE OF CONFLICT, THE ENGINEER SHALL BE NOTIFIED IMMEDIATELY SO THAT CLARIFICATIONS MAY BE MADE PRIOR TO THE START OF WORK.
5. EXISTING ELEVATIONS TO BE JOINED SHALL BE CONFIRMED PRIOR TO CONSTRUCTION STAKING.
6. ALL DETAILS ARE NOT TO SCALE. USE DIMENSIONS.
7. CONTRACTOR SHALL CHECK WITH APPROPRIATE UTILITY COMPANIES AND GOVERNMENT AGENCIES, IN ORDER TO COORDINATE THE PROTECTION OF EXISTING UTILITIES TO REMAIN, PRIOR TO COMMENCEMENT OF WORK. ALL UTILITIES OVERHEAD AND UNDERGROUND TO REMAIN SHALL BE PROTECTED FROM DAMAGE.
8. ALL WORK WITHIN THE PARK AREA ON THE NORTH SIDE OF THE PROPERTY SHOWN SHALL BE SUBJECT TO APPROVAL OF THE APPROPRIATE AUTHORITIES.
9. LOCATION OF ELEVATION CONTROL POINTS MAY BE SCALED IF NOT DIMENSIONED.
10. ADD 300.00 TO ALL TWO DIGIT ELEVATIONS SHOWN.
11. DIMENSIONS TO PIPELINES, ETC., ARE TO CENTERLINE UNLESS OTHERWISE NOTED.
12. DISTANCES SHOWN ALONG PIPELINES ARE HORIZONTAL DISTANCES BETWEEN STRUCTURES AND NOT PIPE LENGTHS.
13. CONTRACTOR SHALL OBTAIN PERMISSION FROM THE CITY OF ESCONDIDO FOR ALL WORK ON AND ADJACENT TO THE PUBLIC RIGHT-OF-WAY, AND FROM CALTRANS FOR ANY ENCROACHMENT INTO INTERSTATE ROUTE 15.
14. LANDSCAPING AND IRRIGATION WILL BE PROVIDED WITH THE FINISHED GRADING.
15. ALL STORM DRAIN PIPE SHALL BE REINFORCED CONCRETE PIPE (R.C.P.) CONFORMING WITH ASTM C76. CLASS IV WILL BE FURNISHED UNLESS OTHERWISE INDICATED. JOINTS SHALL BE MORTARED TONGUE AND GROOVE PER SECTION 306-1.2.4 OF THE STANDARD SPECIFICATIONS FOR PUBLIC WORKS CONSTRUCTION, LATEST EDITION.
16. PRECAST CONCRETE MANHOLES SHALL CONFORM TO ASTM C478. MANHOLE COVERS SHALL BE RATED FOR HEAVY TRAFFIC LOADS AND SHALL HAVE THE LETTER "D" CAST THEREON.
17. NOT ALL IMPROVEMENTS HAVE BEEN FLAGGED. USE THE SAME DETAILS FOR SIMILAR FORMS UNLESS OTHERWISE NOTED.
18. ALL TRENCHING AND BACKFILL BY UTILITY COMPANIES AND OTHER AGENCIES SHALL CONFORM WITH THE EARTHWORK SECTION OF THE SPECIFICATIONS AND BE SUBJECT TO TESTING BY THE SOILS ENGINEER.
19. CONTRACTOR TO PROVIDE SANITARY SEWER PIPE BEDDING PER DETAIL 3 ON SHEET U-6 FOR P.V.C. PIPE OR PER S.D.R.S.D. DWG. NO. S-5 FOR V.C.P.
20. SEWER LATERALS TO BE CONSTRUCTED BY METHOD OF CONTRACTORS CHOICE. UNIFORM PLUMBING CODE, CURRENT EDITION, SHALL BE ADHERED TO.
21. ALL STORM DRAIN & SANITARY SEWER MANHOLES SHALL BE CONSTRUCTED WITH A MINIMUM OF 12" OF ADJUSTMENT RINGS ABOVE CONE SECTION.
22. COORDINATES OF CURB OPENING TYPE CATCH BASINS ARE TO CENTERLINE INTERSECT OF STRUCTURE AND CURB FACE.
23. CERTAIN ITEMS OF WORK WILL REQUIRE COMPLETION AFTER THE PROPOSED BUILDINGS ARE CONSTRUCTED AND THE WALLS ARE BACKFILLED. REFER TO REFERENCE DRAWINGS OF 833 FOR AREAS OF TEMPORARY CONSTRUCTION SLOPES.
24. THE SITE CURRENTLY POSSESSES A GROUND WATER COLLECTION SYSTEM (GSD). DUE TO THE LOCATION AND DEPTH OF VARIOUS UTILITIES TO BE CONSTRUCTED AS SHOWN HEREIN, IT IS LIKELY THAT GROUND WATER WILL BE ENCOUNTERED. IT IS SOLELY THE CONTRACTOR'S RESPONSIBILITY FOR DEWATERING TECHNIQUES AS REQUIRED.
25. EROSION CONTROL MEASURES ARE TO BE IMPLEMENTED. REFER TO SHEET U-2 FOR DETAILS.

## LEGEND

| EXISTING | PROPOSED | DESCRIPTION |
|---|---|---|
| | | PROPERTY LINE |
| | | CENTER LINE |
| —(SS)— | —SS— | SANITARY SEWER LINE |
| —(SD)— | —SD— | STORM DRAIN LINE |
| —(G)— | —G— | GAS LINE |
| —(T)— | —T— | TELEPHONE LINE |
| —(E)— | —E— | ELECTRICAL LINE |
| —(W)— | —W— | WATER LINE |
| | ○ | CATCH BASIN |
| TG | | TOP OF GRATE |
| | | SWALE |
| | | GRADE BREAK |
| | | SWALE |
| | | GRADE BREAK |
| | | SWALE |
| | | GRADE BREAK

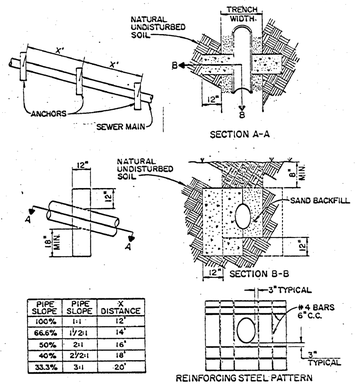


| PIPE SLOPE | PIPE SLOPE | X DISTANCE |
|---|---|---|
| 100% | 1:1 | 12' |
| 66.6% | 1½:1 | 14' |
| 50% | 2:1 | 16' |
| 40% | 2½:1 | 18' |
| 33.3% | 3:1 | 20' |

1. PIPE ANCHORS REQUIRED ON ALL SLOPES OF 3:1 OR GREATER.
2. ANCHOR SHALL EXTEND 12" INTO NATURAL UNDISTURBED SOIL.
3. CONCRETE SHALL BE CLASS "A".
4. ANCHORS FOR TRAPAZOIDAL TRENCH SECTIONS WILL CONFORM TO TRENCH CROSS SECTION AND EXTEND 12" INTO UNDISTURBED SOIL.

## CONCRETE SLOPE ANCHORS (1)
N T S

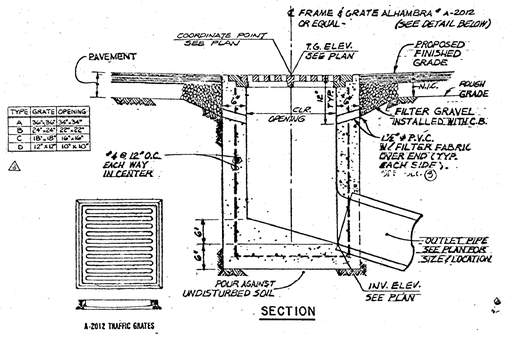


| TYPE | GRATE | OPENING |
|---|---|---|
| A | 34"x34" | 34"x34" |
| D | 24"x24" | 22"x22" |
| C | 18"x18" | 16"x16" |
| D | 12"x12" | 10"x10" |

## SECTION

## CATCH BASIN (2)
N T S

⚠ OR EQUAL

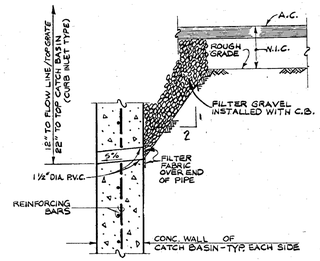


## SECTION DETAIL (3)
N T S

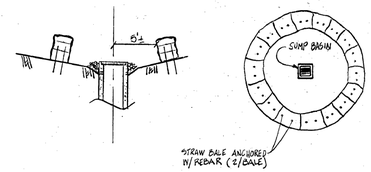


## EROSION CONTROL DETAIL
N T S

NOTE
CURB INLET COORDINATES WITH ASTERISK (*) NEXT TO ARE APPROXIMATE. THE CONTRACTOR TO CONSULT ENGINEER PRIOR TO BEGINNING OF CONSTRUCTION

| SEARS | | |
|---|---|---|
| POINT NO. | COORDINATE NORTH | EAST |
| 316 | 29662.43 | 50359.80 |
| 373 | 29921.88 | 50396.26 |
| 374 | 29914.64 | 50447.75 |
| 375 | 29986.93 | 50457.91 |
| 376 | 29964.94 | 50614.38 |
| 377 | 29892.65 | 50604.22 |
| 378 | 29881.79 | 50681.46 |
| 317 | 29622.34 | 50644.99 |

| ROBINSON | | |
|---|---|---|
| POINT NO. | COORDINATE NORTH | EAST |
| 378 | 29100.97 | 50476.53 |
| 379 | 29126.31 | 50506.72 |
| 380 | 29118.82 | 50613.94 |
| 381 | 29236.91 | 50749.79 |
| 382 | 29398.91 | 50610.70 |
| 383 | 29278.82 | 50474.86 |
| 384 | 29171.60 | 50467.36 |
| 385 | 29145.35 | 50437.17 |

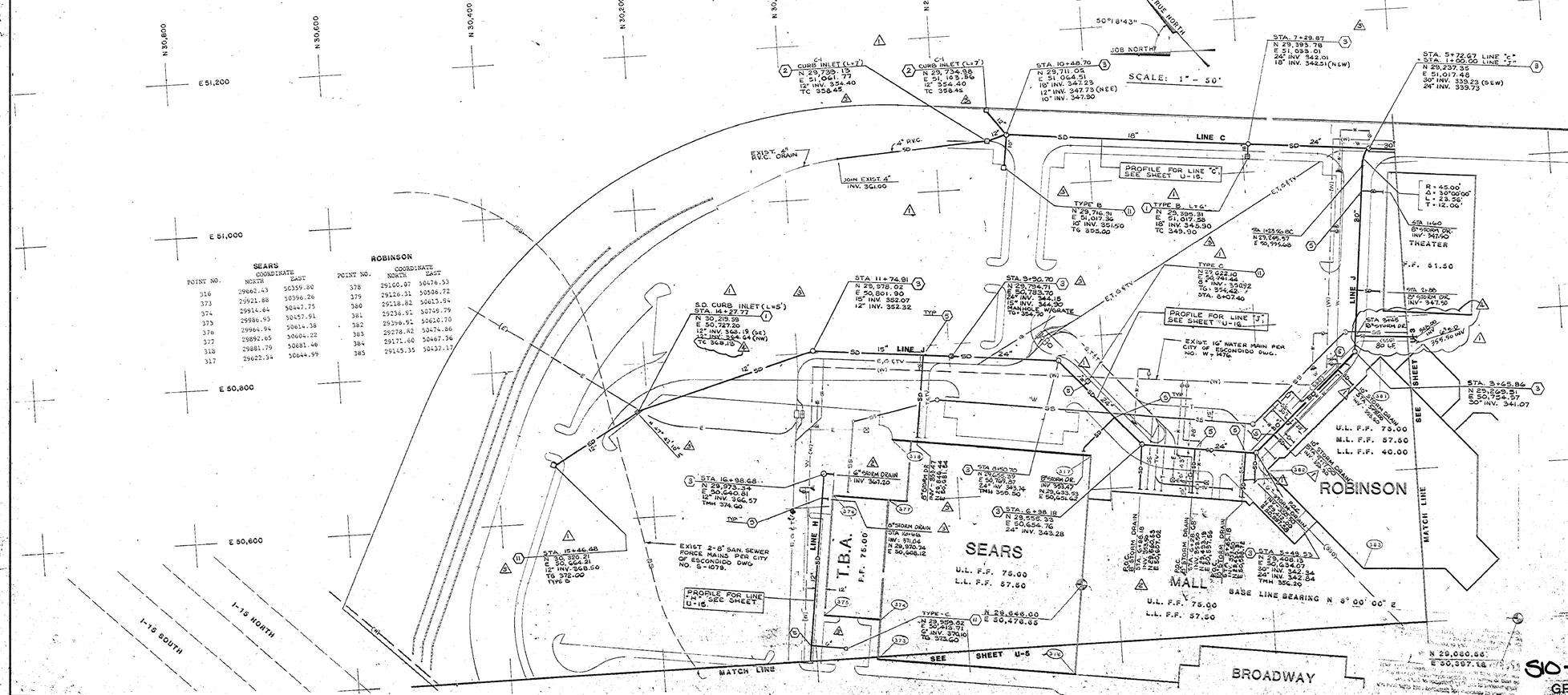


| NO. | DATE | REVISION |
|---|---|---|
| ⚠ | 4-4-85 | GENERAL REVISIONS |
| ⚠ | 2-16-85 | GENERAL REVISIONS |
| ⚠ | 1-10-85 | GENERAL REVISIONS |
| ⚠ | 12-17-84 | GENERAL REVISIONS |

| DATE | ISSUED FOR |
|---|---|
| 8-16-84 | PERMIT |
| 10-15-84 | BIDDING |


PALLER-ROBERTS ENGINEERING, INC.
CONSULTING CIVIL ENGINEERS
6701 BLAUBON AVENUE, SUITE 208
CULVER CITY, CALIFORNIA 90230 • PHONE (213) 641-1853


PREPARED FOR
ERNEST W. HAHN, INC.
3666 KEARNY VILLA ROAD
SAN DIEGO, CALIFORNIA
(619) 569-4949

# NORTH COUNTY FAIR
ESCONDIDO, CALIFORNIA

NE QUADRANT
## STORM DRAIN PLAN & DETAILS

DWG. NO. U-2

SD-002
GP 905

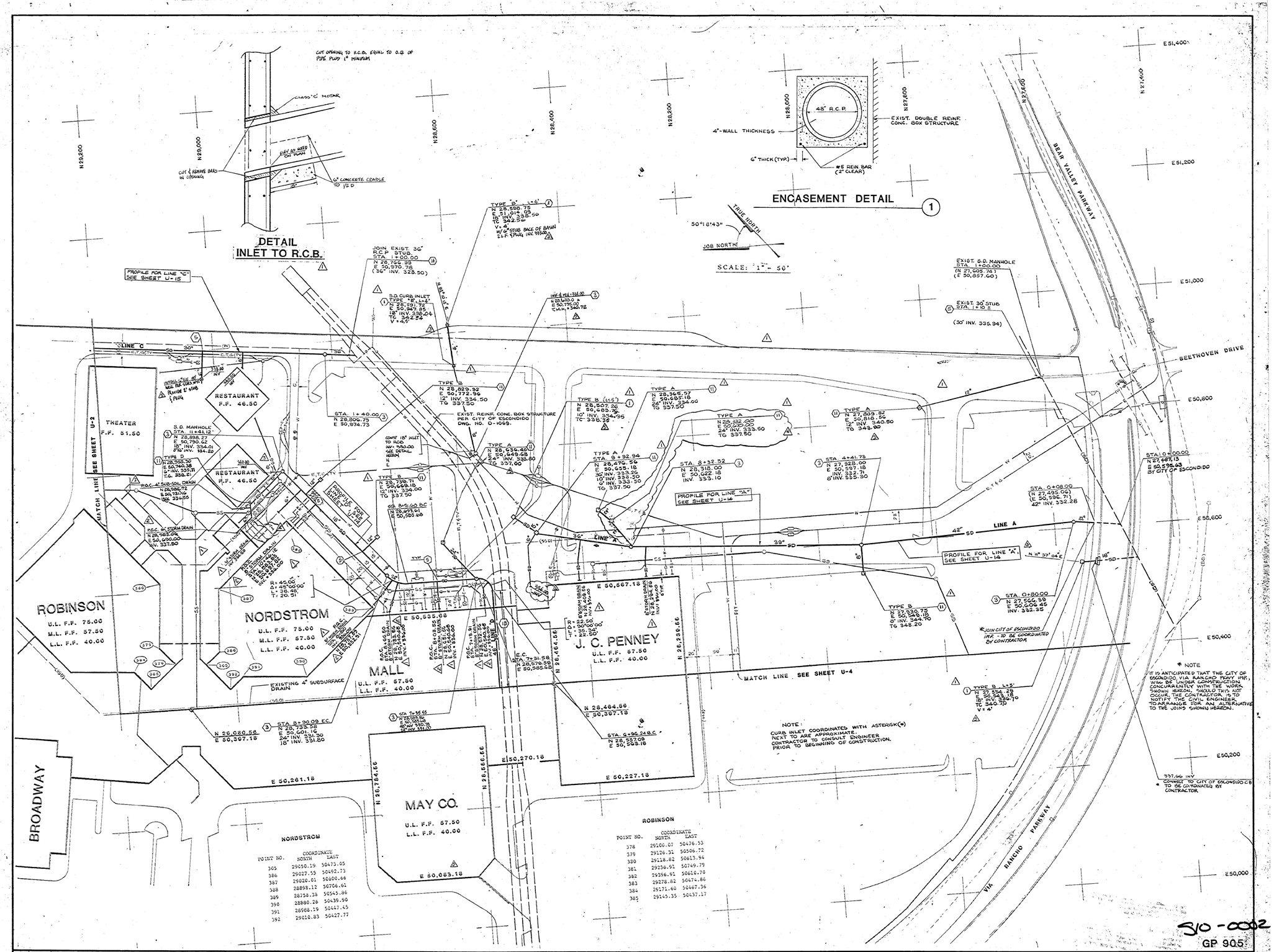
DETAIL
INLET TO R.C.B.
CUT OPENING TO R.C.P. EQUAL TO O.D. OF PIPE PLUS 1" MINIMUM
CLASS 'C' MORTAR
KEEP AS DEEP AS POSSIBLE
CUT & REMOVE BARS IN OPENING
6" CONCRETE CRADLE TO 1/2 D
ENCASEMENT DETAIL
48" R.C.P.
4"-WALL THICKNESS
6" THICK (TYP.)
#5 REIN. BAR (2" CLEAR)
EXIST. DOUBLE REINF. CONC. BOX STRUCTURE
SCALE: 1" = 50'
TRUE NORTH
50°18'43"
JOB NORTH
BEAR VALLEY PARKWAY
BEETHOVEN DRIVE
PROFILE FOR LINE "C" SEE SHEET U-15
LINE C
EXIST. S.D. MANHOLE STA. 1+00.00 (N 27,605.74) (E 50,857.60)
EXIST. 30" STUB STA. 1+10 ± (30" INV. 335.94)
JOIN EXIST. 36" R.C.P. STUB STA. 1+00.00 N 26,760.99 E 50,970.76 (36" INV. 328.50)
TYPE "A" N 29,592.75 E 51,014.09 15" INV. 328.50 TG 342.50 V=4' W/ 6" STUB BACK OF BASIN E.F. 1 PAVE INV. 99.20
S.D. CURB INLET TYPE "B" L=5' N 28,291.32 E 50,547.85 18" INV. 338.04 TG 342.54 V=4.5'
INV 4 MH-334.00 N 25,430.0 E 50,776.00 CMP INV. +342.72
STA. 1+40.00 N 28,806.79 E 50,874.73
TYPE B N 28,829.92 E 50,772.99 12" INV. 334.50 TG 337.50
EXIST. REINF. CONC. BOX STRUCTURE PER CITY OF ESCONDIDO DWG. NO. D-1069.
TYPE B (L=5') N 28,502.26 E 50,483.26 10" INV. 334.95 TC 338.38
TYPE A N 28,365.57 E 50,685.16 24" INV. 334.00 TG 337.50
TYPE A N 28,236.60 E 50,649.68 24" INV. 333.80 TG 337.00
TYPE A N 28,476.56 E 50,655.18 36" INV. 333.00 30" INV. 333.50 6" INV. 333.50 TG 337.50
TYPE A N 28,318.00 E 50,622.18 INV. 333.10
STA. 8+32.32
TYPE A N 28,322.00 E 50,220.00 24" INV. 333.50 TG 337.50
TYPE A N 27,899.82 E 50,818.56 12" INV. 340.50 TG 348.80
STA 4+41.75 N 27,928.00 E 51,297.18 INV. 332.31 6" INV. 335.90
STA. 0+00.00 N 27,687.13 E 50,595.63 BY CITY OF ESCONDIDO
STA. 0+08.00 (N 27,695.06) (E 50,596.71) 42" INV. 332.28
STA. 0+80.00 N 27,766.58 E 50,606.45 INV. 332.35
* JOIN CITY OF ESCONDIDO MH# 10 BE COORDINATED BY CONTRACTOR
TYPE B N 27,930.75 E 50,248.70 12" INV. 344.70 TG 348.20
TYPE B L=5' N 27,855.29 E 50,345.18 INV. 336.70 TG 340.70 V=4'
* NOTE IT IS ANTICIPATED THAT THE CITY OF ESCONDIDO, VIA RANCHO PKWY. (MH# ) WILL BE UNDER CONSTRUCTION CONCURRENTLY WITH THE WORK SHOWN HEREON. SHOULD THIS NOT OCCUR, THE CONTRACTOR IS TO NOTIFY THE CIVIL ENGINEER TO ARRANGE FOR AN ALTERNATIVE TO THE JOINS SHOWN HEREON.
337.66 INV CONNECT TO CITY OF ESCONDIDO C.B. TO BE COORDINATED BY CONTRACTOR
PROFILE FOR LINE "A" SEE SHEET U-14
N 11° 37' 04" E
LINE A
42" SD
39" SD
36" SD
18" SD
RESTAURANT F.F. 46.50
THEATER F.F. 51.50
S.D. MANHOLE STA. 11+41.12 N 28,998.27 E 50,790.62 18" INV. 334.01 6"ø INV. 334.22
TYPE B N 28,955.50 E 50,740.38 INV. 335.71 TG. 338.21
R.C.C. 4" SUB-SOIL DRAIN N 28,986.72 E 50,731.16 INV. 335.55
R.C.C. 4" STORM DRAIN N 28,983.04 E 50,690.00 INV. 337.50
EXISTING 6" STORM DRAIN
EXISTING 4" SUBSURFACE DRAIN
R.C.C. 6" STORM DRAIN STA. 6+50.00 N 28,651.58 E 50,852.51 INV. 334.00
R.C.C. 6" STORM DRAIN STA. 7+31.58 N 28,570.59 E 50,785.62 INV. 333.00
R.C.C. 6" STORM DRAIN STA. 7+96.55 N 28,505.66 E 50,785.66 INV. 332.50
R.C.C. 6" STORM DRAIN STA. 8+08.55 N 28,493.66 E 50,783.66 INV. 332.50
R.C.C. 6" STORM DRAIN N 28,484.66 E 50,783.66 INV. 332.50
R.C.C. 6" STORM DRAIN N 28,464.66 E 50,783.66 INV. 332.50
R.C.C. 6" STORM DRAIN N 28,444.66 E 50,783.66 INV. 332.50
R.C.C. 6" STORM DRAIN N 28,424.66 E 50,783.66 INV. 332.50
R.C.C. 6" STORM DRAIN N

ROBINSON

NORDSTROM

MALL
U.L. F.F. 57.50
L.L. F.F. 40.00

J. C. PENNEY
U.L. F.F. 57.50
L.L. F.F. 40.00

MAY CO
U.L. F.F. 57.50
L.L. F.F. 40.00

BROADWAY
U.L. F.F. 75.00
L.L. F.F. 57.50

MATCH LINE SEE SHEET U-3

MATCH LINE SEE SHEET U-5

PROFILE FOR LINE "D" SEE SHEET U-14

PROFILE FOR LINE "F" SEE SHEET U-14

PROFILE FOR LINE "G" SEE SHEET U-15

PROFILE FOR LINE "L" SEE SHEET U-14

PROFILE FOR LINE "E" SEE SHEET U-14

JOIN EXIST. 18" R.C.P. STUB WITH PIPE COLLAR STA 1+00.00 N 28,511.05 E 50,161.46 (18" INV.= 327.50)

EXIST. REINF. CONC. BOX STRUCTURE PER CITY OF ESCONDIDO DWG. NO. D-1069

VIA RANCHO PARKWAY

SUNSET DRIVE

I-15 NORTH

I-15 SOUTH

TRUE NORTH

50°18'43" JOB NORTH

SCALE: 1" = 50'

CURB INLET COORDINATES WITH ASTERISK(*) NEXT TO ARE APPROXIMATE. CONTRACTOR TO CONSULT ENGINEER PRIOR TO BEGINNING OF CONSTRUCTION

SD-0002

GP 905

| NO. | DATE | REVISION |
|---|---|---|
| 4 | 4-4-85 | GENERAL REVISIONS |
| 3 | 2-4-85 | GENERAL REVISIONS |
| 2 | 1-10-85 | GENERAL REVISIONS |
| 1 | 11-13-84 | GENERAL REVISIONS |
| | 5/13/84 | PERMIT |
| | 10-15-84 | BIDDING |
| | DATE | ISSUED FOR |


PALLER-ROBERTS ENGINEERING, INC.
CONSULTING CIVIL ENGINEERS
5701 SLAUSON AVENUE, SUITE 208
CULVER CITY, CALIFORNIA 90230 • PHONE (213) 641-1853


PREPARED FOR
ERNEST W. HAHN, INC.
3666 KEARNY VILLA ROAD
SAN DIEGO, CALIFORNIA
(619) 569-4949

# NORTH COUNTY FAIR
ESCONDIDO, CALIFORNIA

SW QUADRANT
## STORM DRAIN PLAN

DWG. NO. U-4

NOTE
CURB INLET COORDINATES WITH ASTERISK (*) NEXT TO ARE APPROXIMATE. CONTRACTOR TO CONSULT ENGINEER PRIOR TO BEGINNING OF CONSTRUCTION

BROADWAY

| POINT NO. | COORDINATE NORTH | EAST |
|---|---|---|
| 321 | 29280.67 | 50358.68 |
| 371 | 29310.93 | 50144.79 |
| 372 | 29552.56 | 50178.74 |
| 322 | 29522.49 | 50392.64 |

SEARS

| POINT NO. | COORDINATE NORTH | EAST |
|---|---|---|
| 316 | 29662.43 | 50359.80 |
| 373 | 29921.88 | 50396.26 |
| 374 | 29914.64 | 50447.75 |
| 375 | 29988.91 | 50457.91 |
| 376 | 29964.11 | 50614.38 |
| 377 | 29892.65 | 50604.72 |
| 318 | 29881.79 | 50661.48 |
| 317 | 29622.34 | 50644.99 |

SCALE: 1" = 50'

| NO. | DATE | REVISION |
|---|---|---|
| 4 | 4-4-85 | GENERAL REVISIONS |
| 3 | 2-16-05 | GENERAL REVISIONS |
| 2 | 1-10-85 | GENERAL REVISIONS |
| 1 | 12-11-84 | GENERAL REVISIONS |
| | 10-15-84 | DIDDING |
| | 9/13/84 | PERMIT |
| | DATE | ISSUED FOR |

PALLER-ROBERTS ENGINEERING, INC.
CONSULTING CIVIL ENGINEERS
5701 SLAUSON AVENUE, SUITE 208
CULVER CITY, CALIFORNIA 90230 • PHONE (213) 641-1853

PREPARED FOR
ERNEST W. HAHN, INC.
3666 KEARNY VILLA ROAD
SAN DIEGO, CALIFORNIA
(619) 569-4949

# NORTH COUNTY FAIR
ESCONDIDO, CALIFORNIA

NW QUADRANT
## STORM DRAIN PLAN

DWG. NO. U-5

GP 905

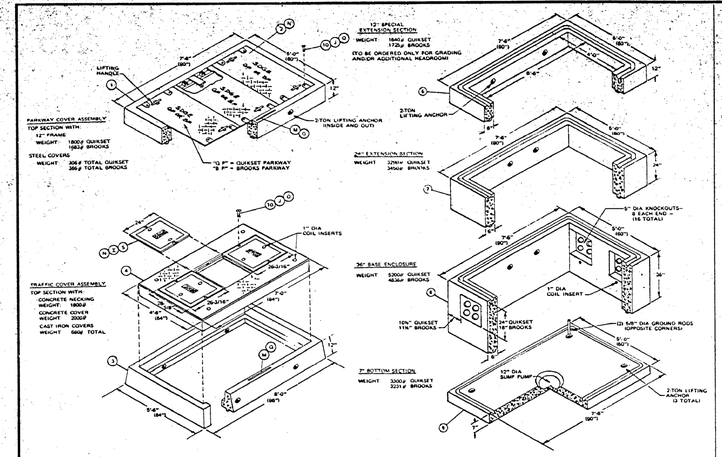


ELECTRIC HANDHOLE NO. 3315
N T S

1

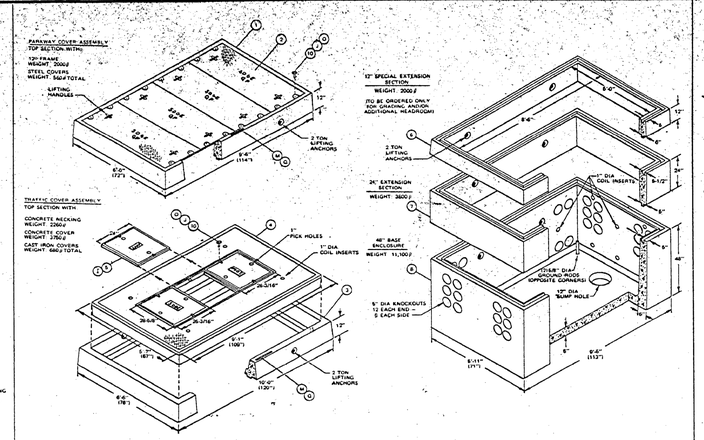


ELECTRIC HANDHOLE NO. 3316
N T S

2

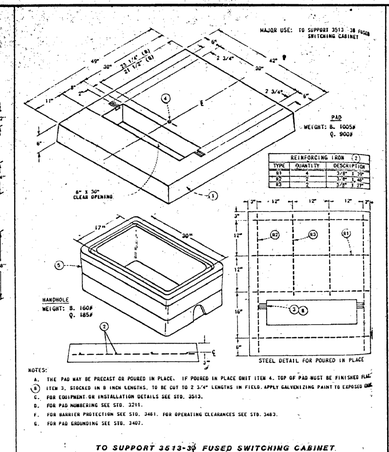


*TO SUPPORT 3513-3Ø FUSED SWITCHING CABINET*

FUSE CABINET PAD
N T S

3

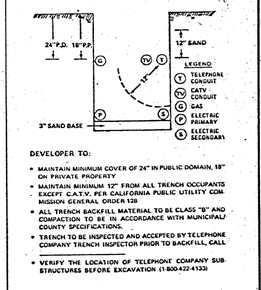


JOINT TRENCH DETAIL
N T S

4

## UTILITY STANDARD PLANS & NOTES

| | |
|---|---|
| 3412 | 1Ø FUSED SWITCHING PAD |
| 3513 | 3Ø FUSED SWITCHING CABINET |
| 3315.1 THRU 3315.4 | 3315 HANDHOLE |
| 3316.1 THRU 3316.6 | 3316 HANDHOLE |
| 3370.1 THRU 3370.5 | UNDERGROUND DISTRIBUTION (UD) TRENCHES |
| 3427.1 | 1Ø TRANSFORMER PAD |

UTILITY NOTES: (E,T,TV,G)

1. ALL WORK SHALL BE DONE IN ACCORDANCE WITH AND UNDER THE INSPECTION AND APPROVAL OF THE RESPECTIVE UTILITY, SAN DIEGO GAS & ELECTRIC (G & E) OR PACIFIC BELL (T).
2. COORDINATES OF ALL STRUCTURES ARE TO CENTERLINE INTERSECT.
3. MINIMUM RADIUS OF ALL DUCT WORK TO BE 25'R.
4. TRANSFORMER TYPE TO BE VERIFIED PRIOR TO CONSTRUCTION.
5. POINT OF CONNECTION TO BE 5' OUTSIDE OF CURB FACE FOR E,T,&TV. (MALL ONLY)

NOTE: THIS PLAN IS TO BE USED FOR LAYING OUT THE ELECTRIC, GAS, TELEPHONE AND CABLE TV UTILITIES SHOWN. THE ISSUE OF CONSTRUCTION SHOULD BE TAKEN FROM PLANS PREPARED BY THE RESPECTIVE UTILITY COMPANIES, IF AVAILABLE. IF ANY CONFLICT EXISTS, THE UTILITY COMPANY PLANS SHALL COVERN.

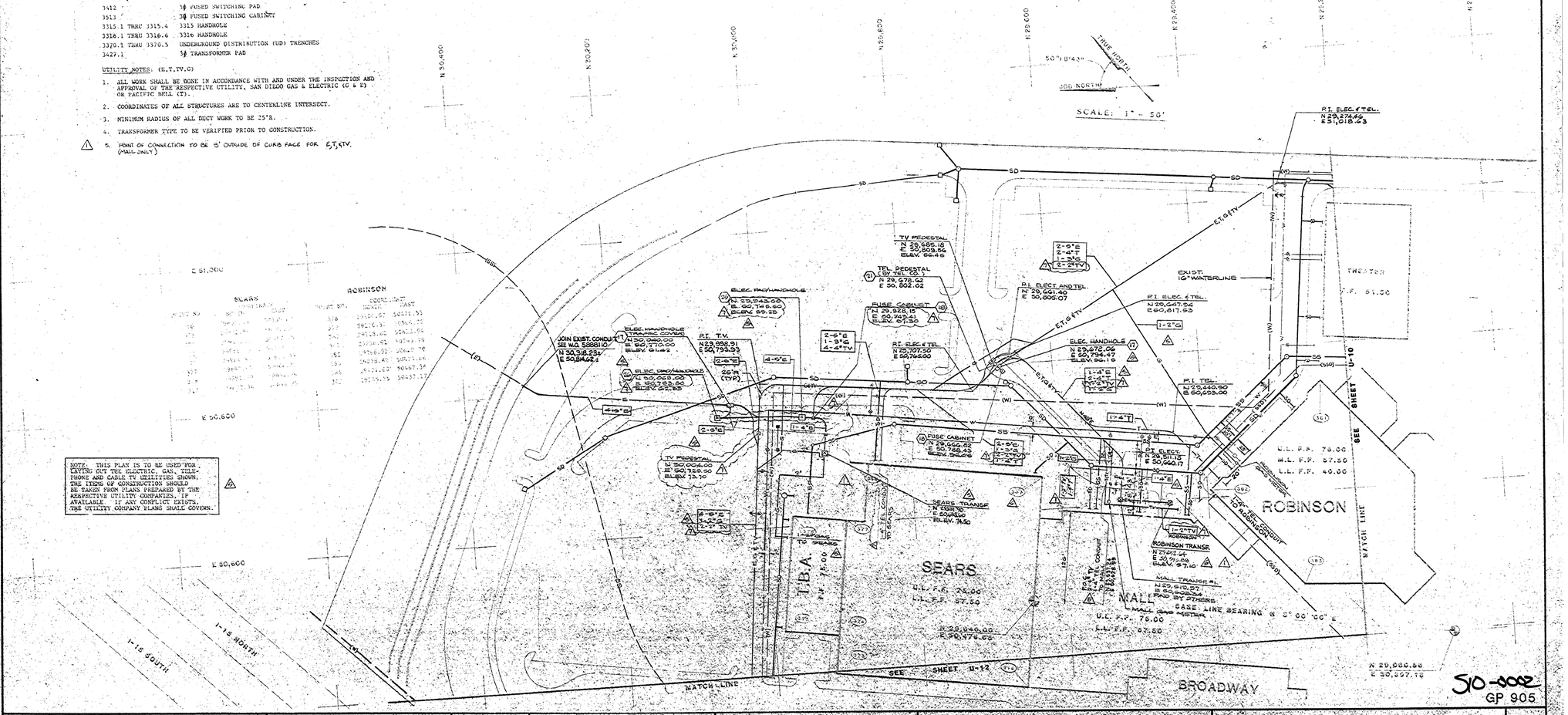


4A
5A

SD-0082
GP 905

| NO. | DATE | REVISION |
|---|---|---|
| 1 | 6-20-86 | GENERAL REVISIONS |
| 2 | 7-31-86 | GENERAL REVISIONS |
| 3 | 10-24-86 | GENERAL REVISION |
| 4 | 10-24-86 | GENERAL REVISION |

| DATE | ISSUED FOR |
|---|---|
| 6/13/86 | PERMIT |
| 9-15-86 | BIDDING |

**PALLER-ROBERTS ENGINEERING, INC.**
CONSULTING CIVIL ENGINEERS
5701 SLAUSON AVENUE, SUITE 208
CULVER CITY, CALIFORNIA 90230 - PHONE (213) 641-1953

PREPARED FOR
ERNEST W. HAHN, INC.
3666 KEARNY VILLA ROAD
SAN DIEGO, CALIFORNIA
(619) 569-3949

**NORTH COUNTY FAIR**
ESCONDIDO, CALIFORNIA

NE QUADRANT
**UTILITY COMPOSITE**

DWG. NO. U-9

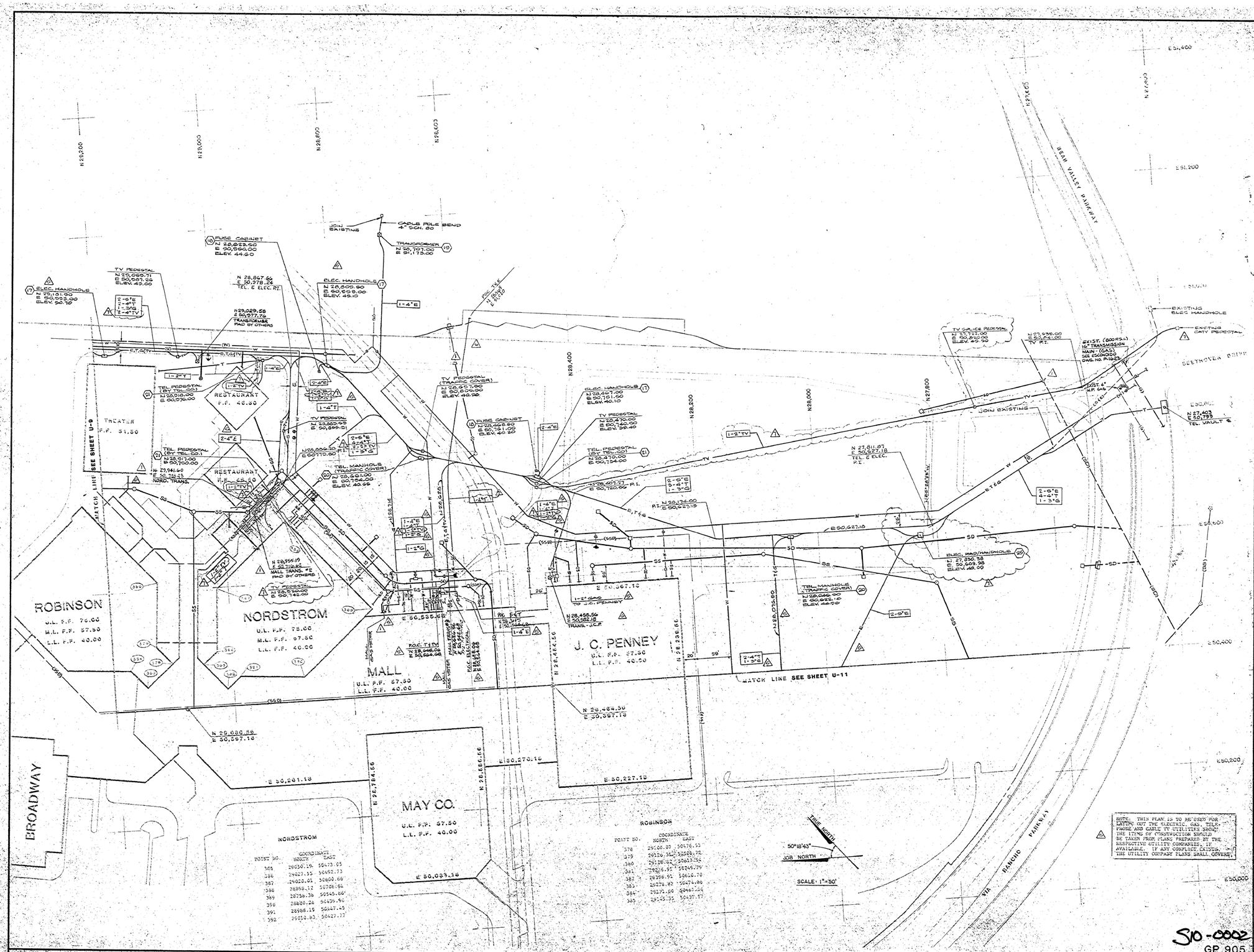


NORDSTROM

| POINT NO. | COORDINATE NORTH | EAST |
|---|---|---|
| 385 | 29030.19 | 50473.05 |
| 386 | 29027.52 | 50452.73 |
| 387 | 29020.01 | 50800.68 |
| 388 | 28898.12 | 50706.91 |
| 389 | 28750.38 | 50545.66 |
| 390 | 28820.26 | 50439.90 |
| 391 | 28988.19 | 50347.45 |
| 392 | 29010.83 | 50427.77 |

ROBINSON

| POINT NO. | COORDINATE NORTH | EAST |
|---|---|---|
| 378 | 29100.07 | 50476.53 |
| 379 | 29156.51 | 50508.72 |
| 380 | 29136.02 | 50613.04 |
| 381 | 29016.91 | 50749.79 |
| 382 | 28998.91 | 50618.70 |
| 383 | 28978.82 | 50474.88 |
| 384 | 29179.66 | 50467.24 |
| 385 | 29145.35 | 50437.17 |

SJO-0002
GP 905

| NO. | DATE | REVISION |
|---|---|---|
| 3 | 12-20-83 | GENERAL REVISIONS |
| 2 | 7-18-84 | GENERAL REVISIONS |
| 1 | 8-15-84 | GENERAL REVISIONS |
| 0 | 12-14-84 | GENERAL REVISIONS |

| DATE | ISSUED FOR |
|---|---|
| 8/13/84 | PERMIT |
| 10-15-84 | BIDDING |

PALLER-ROBERTS ENGINEERING, INC.
CONSULTING CIVIL ENGINEERS
5701 BLAUSON AVENUE, SUITE 208
CULVER CITY, CALIFORNIA 90230 • PHONE (213) 641-1853

PREPARED FOR
ERNEST W. HAHN, INC.
3666 KEARNY VILLA ROAD
SAN DIEGO, CALIFORNIA
(619) 569-4949

# NORTH COUNTY FAIR
ESCONDIDO, CALIFORNIA

SE QUADRANT
## UTILITY COMPOSITE

DWG. NO. U-10

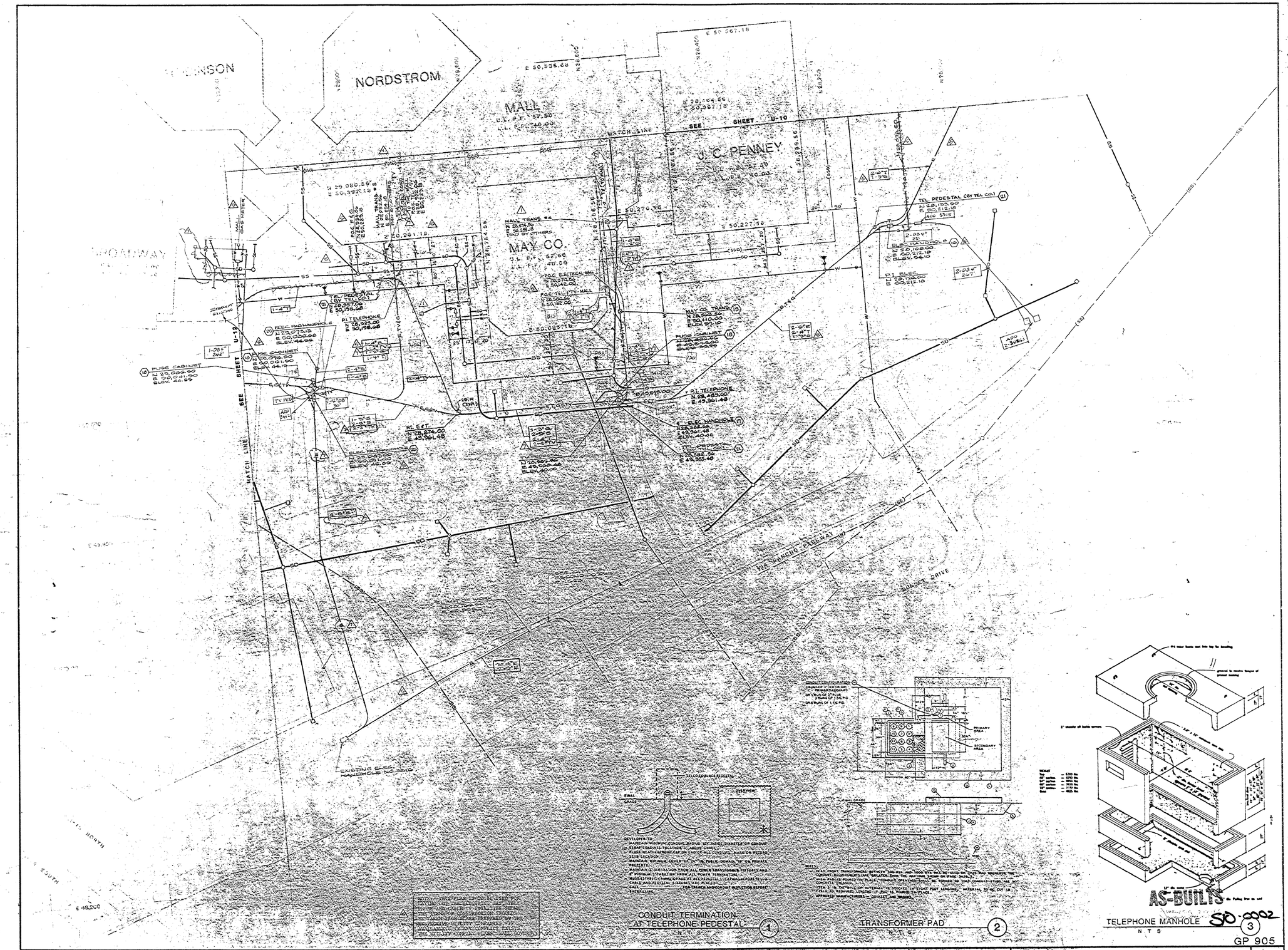


| NO. | DATE | REVISION | DATE | ISSUED FOR |
|---|---|---|---|---|
| 1 | 6-20-85 | GENERAL REVISIONS | | |
| 2 | 4-25-85 | GENERAL REVISIONS | 8/13/84 | PERMIT |
| 3 | 15-2-84 | GENERAL REVISIONS | 10-15-84 | BIDDING |

PALLER-ROBERTS ENGINEERING, INC.
CONSULTING CIVIL ENGINEERS
5701 SLAUSON AVENUE, SUITE 208
CULVER CITY, CALIFORNIA 90230 • PHONE (213) 641-1653

PREPARED FOR
ERNEST W. HAHN, INC.
3666 KEARNY VILLA ROAD
SAN DIEGO, CALIFORNIA
(619) 569-4949

**NORTH COUNTY FAIR**
ESCONDIDO, CALIFORNIA

SW QUADRANT
**UTILITY COMPOSITE**

DWG. NO. U-11

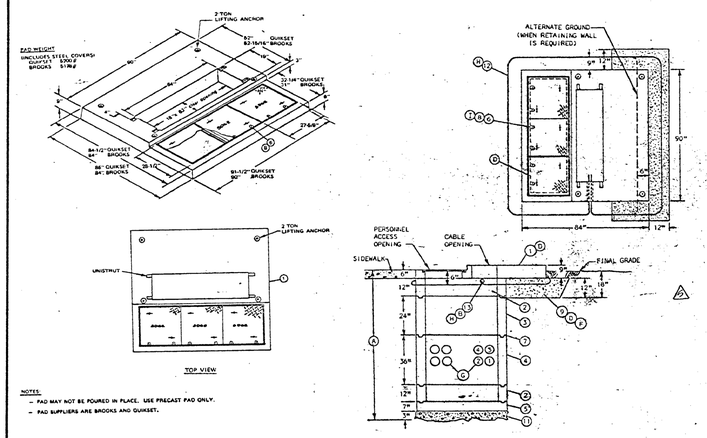


PAD/HANDHOLE NO. 3440 (3)
NTS

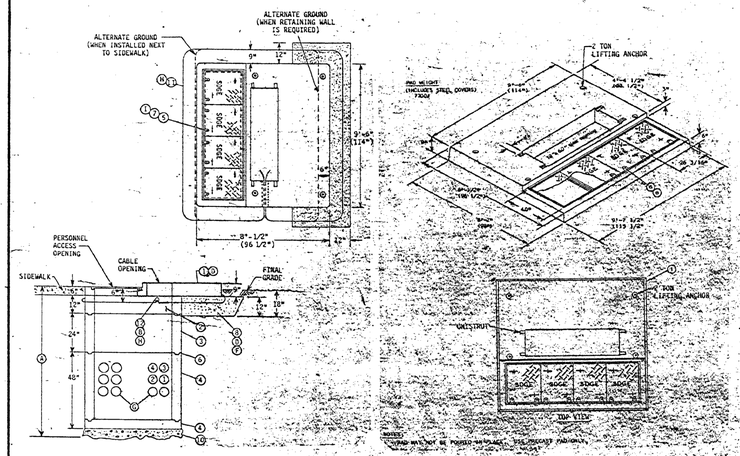


PAD/HANDHOLE NO. 3441 (1)
NTS

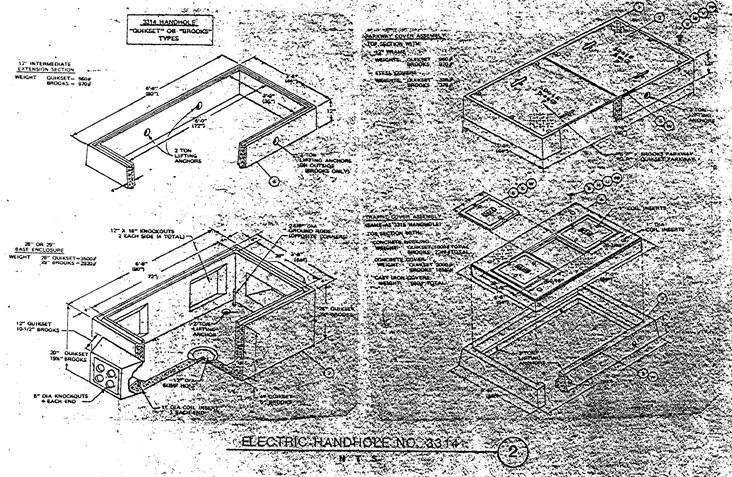


ELECTRIC HANDHOLE NO. 3314 (2)
NTS

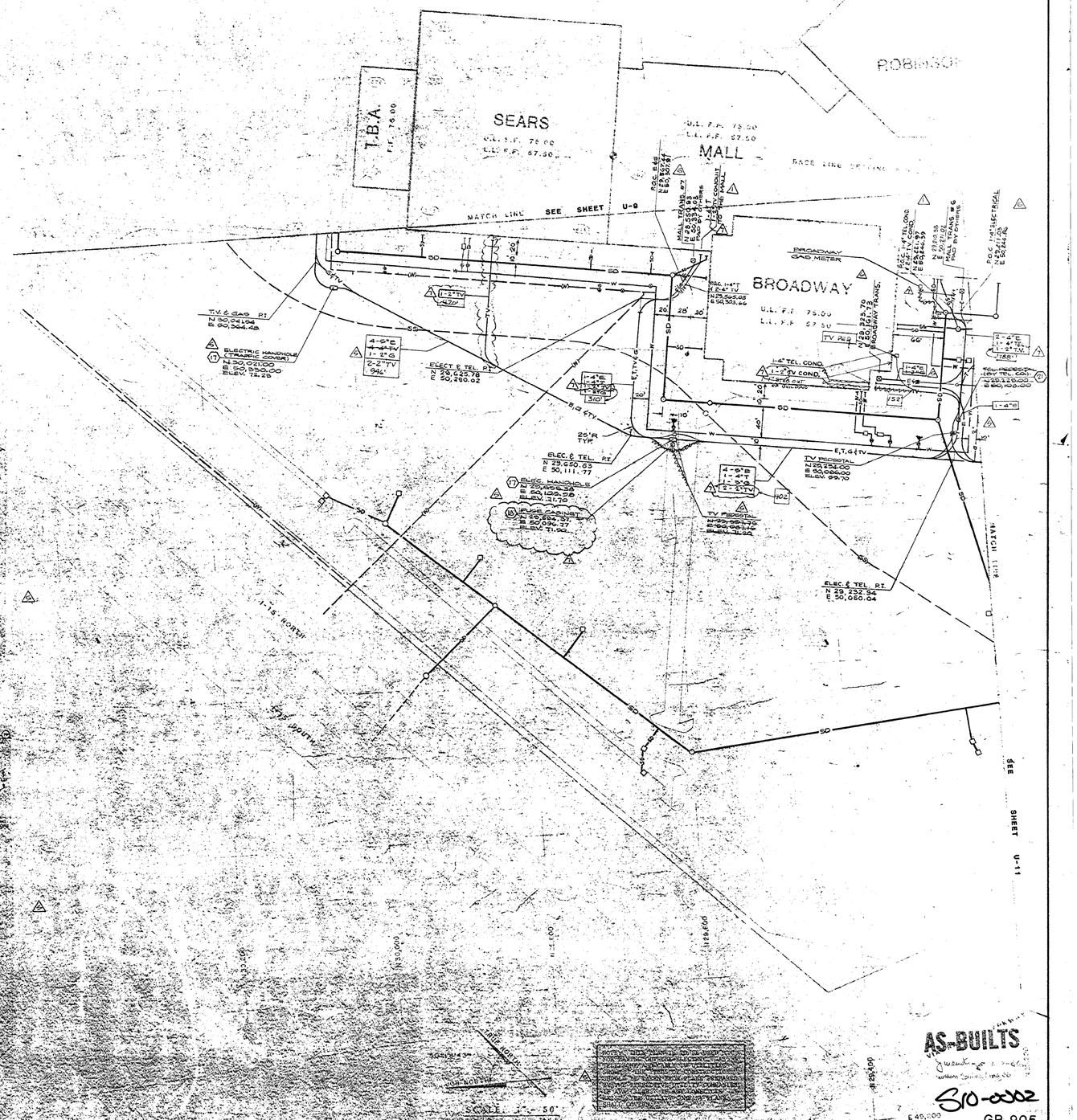


| NO. | DATE | REVISION |
|---|---|---|
| 5 | 5-12-86 | GENERAL REVISIONS |
| 4 | 5-21-85 | GENERAL REVISIONS |
| 3 | 4-22-85 | GENERAL REVISIONS |
| 2 | 11-11-86 | GENERAL REVISIONS |

| DATE | ISSUED FOR |
|---|---|
| 6/13/84 | PERMIT |
| 10-15-84 | DIGGING |

PALLER-ROBERTS ENGINEERING, INC.
CONSULTING CIVIL ENGINEERS
5326 BLAUBOR AVENUE, SUITE 206
CULVER CITY, CALIFORNIA 90230 • PHONE (213) 641-1853

PREPARED FOR:
ERNEST W. HAHN, INC.
3666 KEARNY VILLA ROAD
SAN DIEGO, CALIFORNIA
(619) 569-4949

# NORTH COUNTY FAIR
ESCONDIDO, CALIFORNIA

NW QUADRANT
## UTILITY COMPOSITE

DWG. NO. U-12

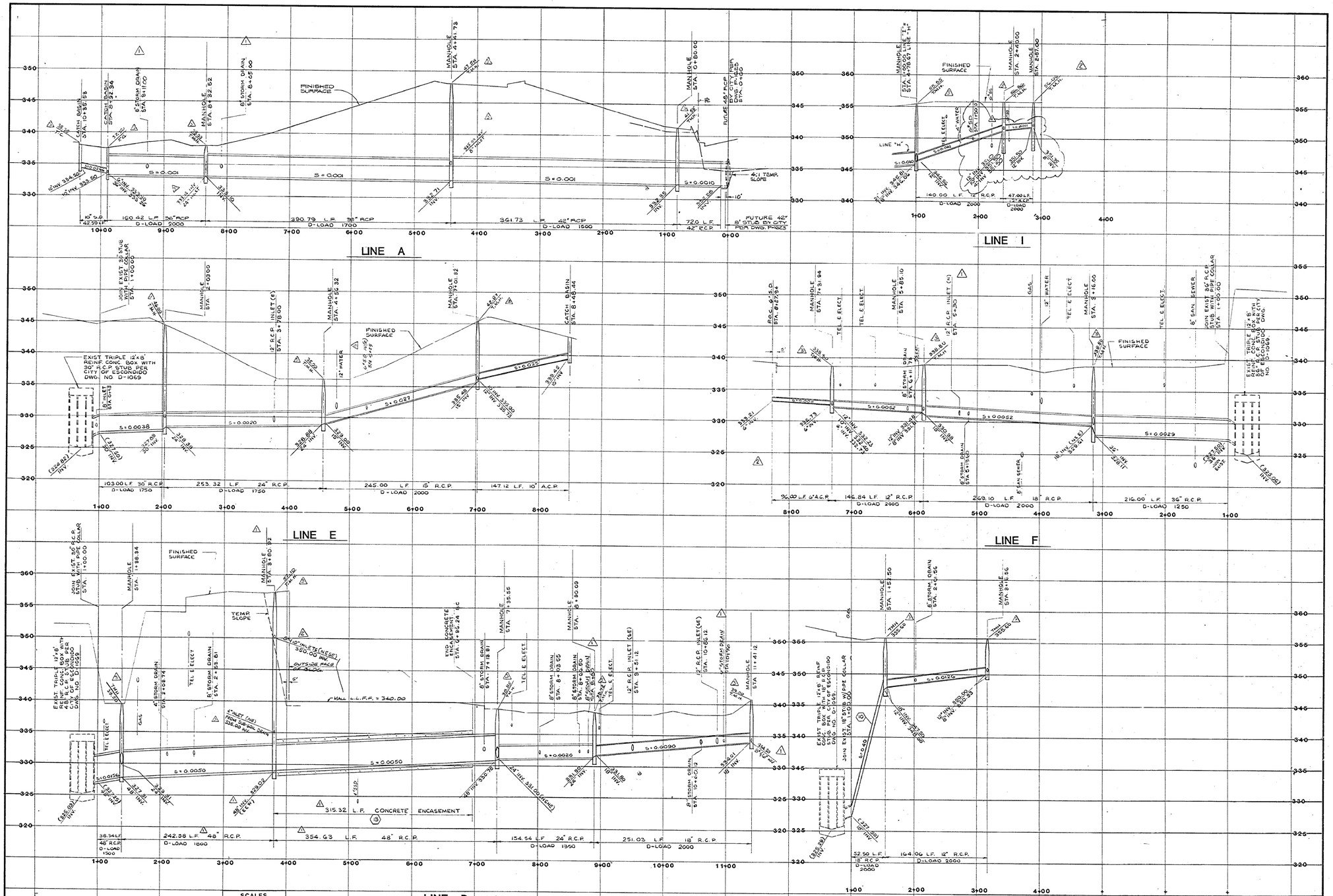


| NO. | DATE | REVISION |
|---|---|---|
| 4 | 4-4-85 | GENERAL REVISIONS |
| 3 | 2-4-85 | GENERAL REVISIONS |
| 2 | 1-10-85 | GENERAL REVISIONS |
| 1 | 12-9-84 | GENERAL REVISIONS |

| DATE | ISSUED FOR |
|---|---|
| 8-13-84 | PERMIT |
| 10-15-84 | BIDDING |


PALLER-ROBERTS ENGINEERING, INC.
CONSULTING CIVIL ENGINEERS
5701 SLAUSON AVENUE, SUITE 208
CULVER CITY, CALIFORNIA 90230 • PHONE (213) 641-1853


PREPARED FOR
ERNEST W. HAHN, INC.
3666 KEARNY VILLA ROAD
SAN DIEGO, CALIFORNIA
(619) 569-4949

# NORTH COUNTY FAIR
ESCONDIDO, CALIFORNIA

## STORM DRAIN PROFILES

GP 905

DWG. NO. U-14

510-8802

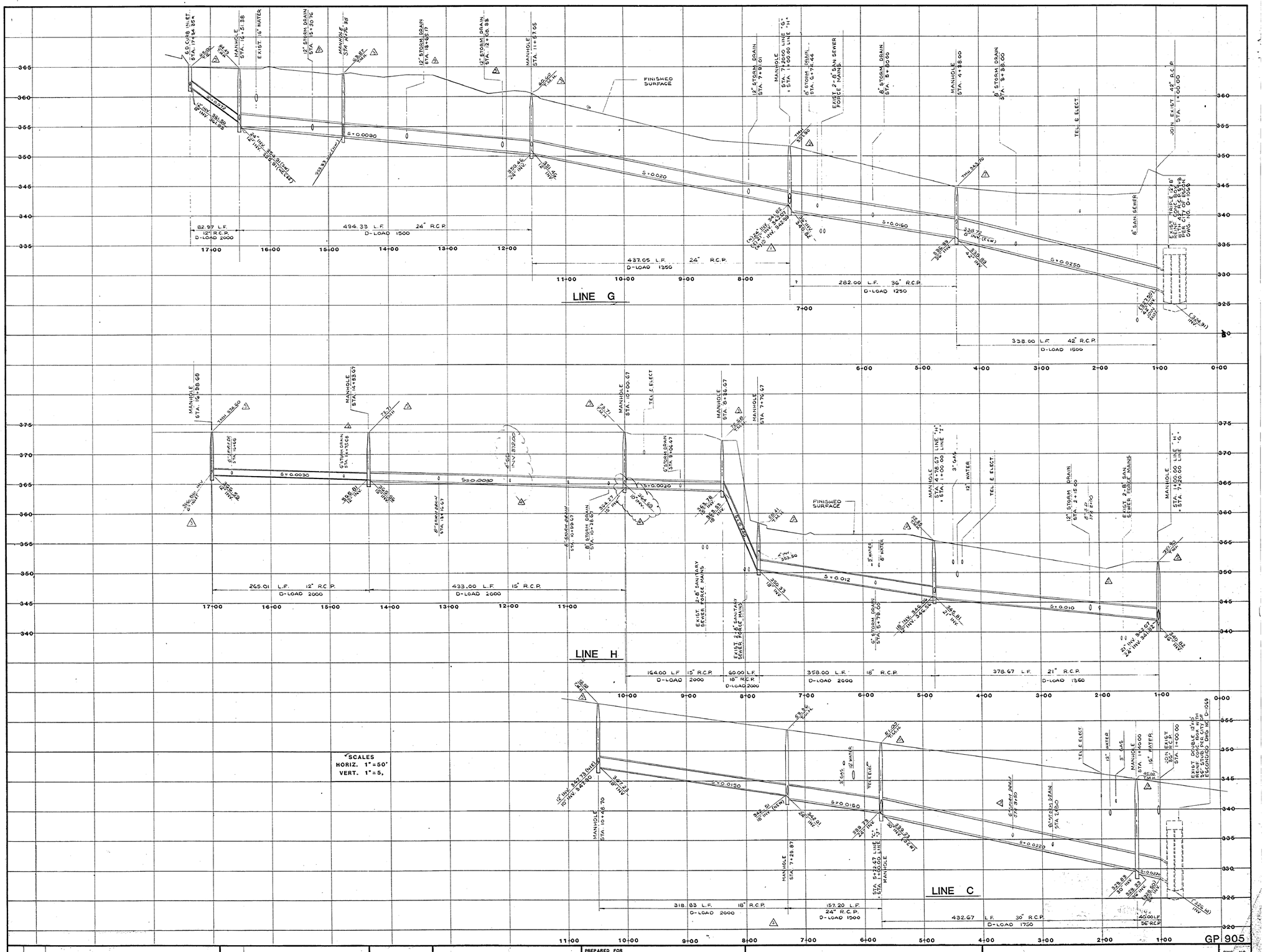


| NO. | DATE | REVISION |
|---|---|---|
| 4 | 4-4-85 | GENERAL REVISIONS |
| 3 | 2-14-85 | GENERAL REVISIONS |
| 2 | 12-17-84 | GENERAL REVISIONS |
| 1 | 8-13-84 | PERMIT |
| | 12-5-84 | BIDDING |

ISSUED FOR


PALLER-ROBERTS ENGINEERING, INC.
CONSULTING CIVIL ENGINEERS
5701 SLAUSON AVENUE, SUITE 208
CULVER CITY, CALIFORNIA 90230 • PHONE (213) 641-1853


PREPARED FOR
ERNEST W. HAHN, INC.
3666 KEARNY VILLA ROAD
SAN DIEGO, CALIFORNIA
(619) 569-4949

# NORTH COUNTY FAIR
ESCONDIDO, CALIFORNIA

# STORM DRAIN PROFILES

DWG. NO. 4 U-15

GP 905

510-0002

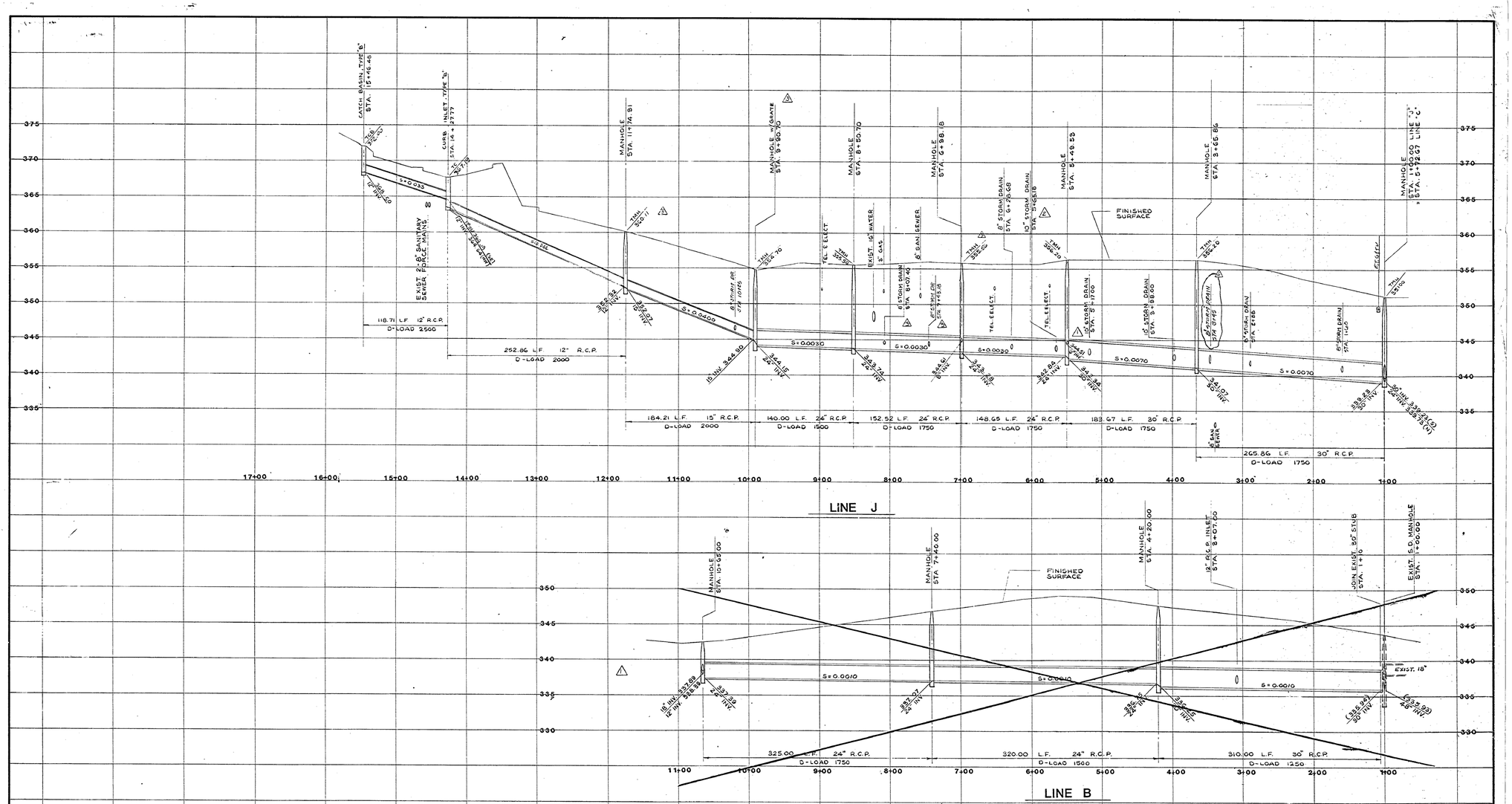


SCALES
HORIZ. 1"=50'
VERT. 1"=5'

GP 905

| NO. | DATE | REVISION |
|---|---|---|
| 1 | 4-4-85 | GENERAL REVISIONS |
| 2 | 7-16-85 | GENERAL REVISIONS |
| 3 | 11-12-85 | GENERAL REVISIONS |
| 4 | 12-19-85 | GENERAL REVISIONS |

| DATE | ISSUED FOR |
|---|---|
| 8-13-86 | PERMIT |
| 10-13-86 | BIDDING |


PALLER-ROBERTS ENGINEERING, INC.
CONSULTING CIVIL ENGINEERS
5701 SLAUSON AVENUE, SUITE 208
CULVER CITY, CALIFORNIA 90230 • PHONE (213) 641-1853


PREPARED FOR
ERNEST W. HAHN, INC.
3666 KEARNY VILLA ROAD
SAN DIEGO, CALIFORNIA
(619) 569-4949

# NORTH COUNTY FAIR
ESCONDIDO, CALIFORNIA

# STORM DRAIN PROFILES

DWG. NO. U-16

310-0882